1150	1150	1150	1150	
Swinghandle 1152	Swinghandle 1153	Swinghandle 1154	Swinghandle 1154	
3C-100	3C-100	3C-100	3C-100	see page

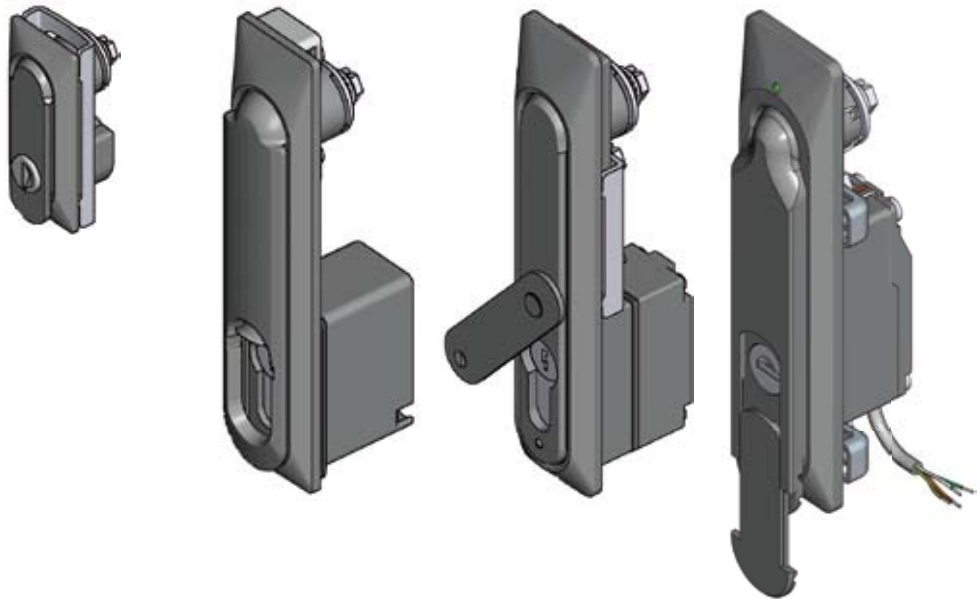

Please see next page for second part. Survey of further products.

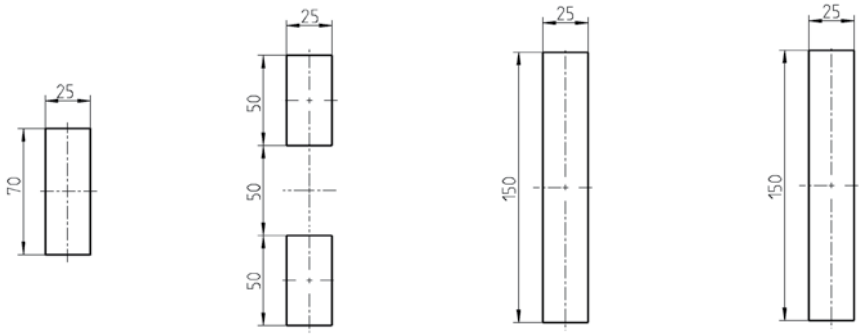

●	●	●	●	Assembling inside the gasketing
				Outside the gasketing
IP 40/IP 65	IP 65	IP 65	IP 65	Protection: IP
				Unlocked with insert
●			●	Unlocked with round cylinder
	●	●		Unlocked with profile half cylinder
			●	Unlocked electronically
●	●	●		Unlocked without key
				Modular locking
●				Handle and escutcheon polyamide
				Handle zinc die and escutcheon polyamide
●	●	●	●	Handle and escutcheon zinc die
		●		Handle and escutcheon stainless steel
				Fitting escutcheons

© EMKA Beschlagteile GmbH & Co. KG • 2016 • www.emka.com

Swinghandles, lift handles, and escutcheons, part 2

1150	1150	1150	1160	1180	1180
Swinghandle 1154	Swinghandle 1154	Swinghandle 1155	Swinghandle	Swinghandle 1180	Swinghandle 1185
3C-100	3C-100	3C-100	3D-100	3E-100	3E-100

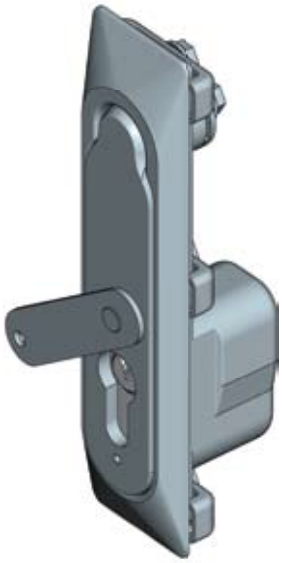

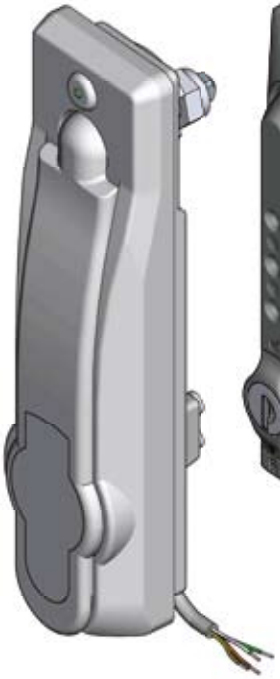

1)

2)

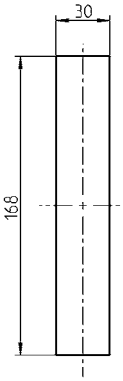

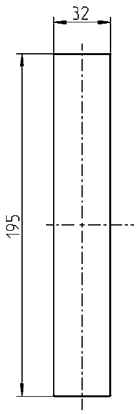

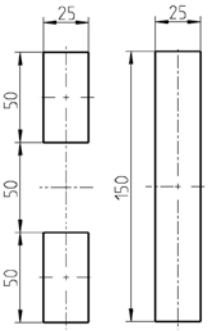

1)

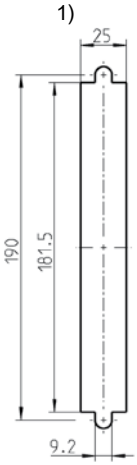

1) 2)

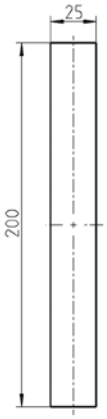

●	●	●	●	●	●
		●	●	●	●
IP 65	IP 65	IP 65	IP 65	IP 54	IP 54
			●	●	●
		●	●	●	●
●	●			●	●
	●			●	●
		Combination lock	●	●	●
				●	●
		●			●
			●	●	
	●		●		
●					
			●	●	

© EMKA Beschlagteile GmbH & Co. KG • 2016 • www.emka.com

1180	1190	1190	1190	1225	
Swinghandle 1185	Lifthandle	Lifthandle	Lifthandle	Swinghandle	
3F-100	3F-100	3F-100	3F-100	3G-100	see page

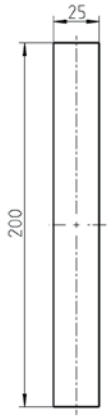

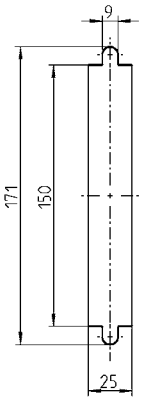

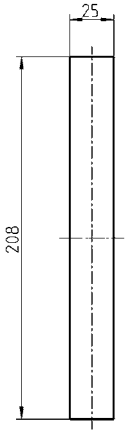

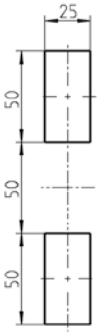

Please see next page for second part. Survey of further products.

Please see previous page for first part. Survey of further products.

●				●	Assembling inside the gasketing
●	●	●	●	●	Outside the gasketing
IP 65	IP 40	IP 40	IP 40	IP 40/IP 65	Protection: IP
	●	●		●	Unlocked with insert
●	●	●		●	Unlocked with round cylinder
	●		●	●	Unlocked with profile half cylinder
	●				Unlocked electronically
●	●			●	Unlocked without key
	●				Modular locking
	●	●	●	●	Handle and escutcheon polyamide
				●	Handle zinc die and escutcheon polyamide
●					Handle and escutcheon zinc die
					Handle and escutcheon stainless steel
	●			●	Fitting escutcheons

© EMKA Beschlagteile GmbH & Co. KG • 2016 • www.emka.com

Swing handle, lift handle, and escutcheon, part 3

1225	1225	1317	1317	1317	1325
Double cylinder swing handle	Swing handle	Swing handle	Swing handle	Swing handle	Swing handle
3G-100	3G-100	3AB-100	3AB-100	3AB-100	3BA-100
		1)	2)	3)	
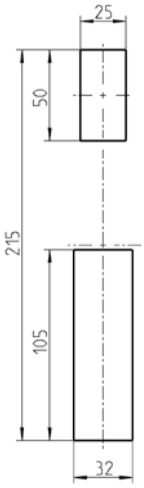	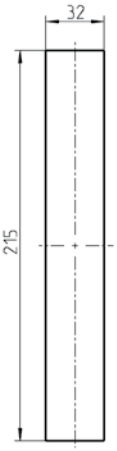	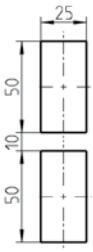	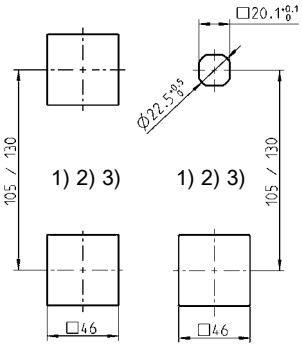	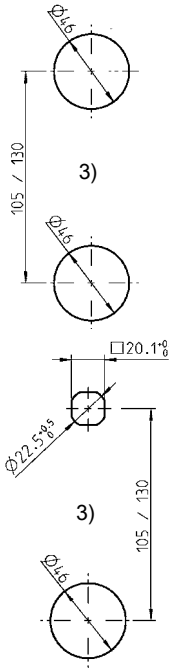	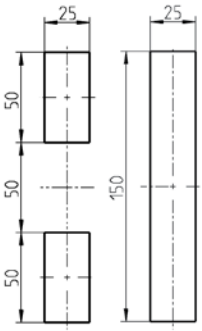
●	●	●	●	●	●
					●
IP 65	IP 65	IP 65	IP 65	IP 65	IP 40/IP 65
				●	●
	●			●	●
●		●	●	●	●
		●			
				●	●
				●	●
	●		●	●	●
●		●	●		
					●

© EMKA Beschlagteile GmbH & Co. KG • 2016 • www.emka.com

1325	2100	2400	3000	
Swing handle	Swing handle	Swing handle	Swing handle	
3BA-100	3H-100	3K-100	3N-100	see page

Please see previous page for first part. Overview of further products.

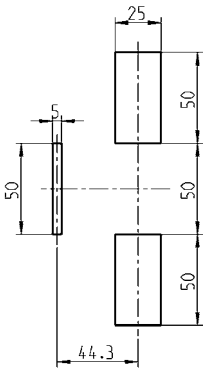

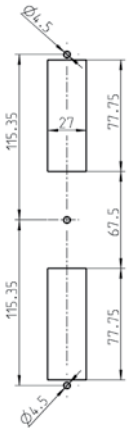

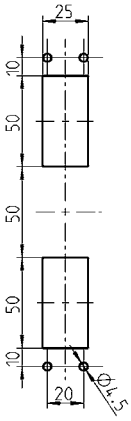

1325	2100	2400	3000	
●	●		●	inside the gasketing
●	●	●	●	outside the gasketing
IP 65	IP 54	IP 40	IP 42	IP rating
●	●	●		Unlocked with insert
●	●	●		Unlocked with round cylinder
●	●	●		Unlocked with profile half cylinder
	●	●	●	Unlocked electronically
●	●	●		Unlocked without key
●	●	●		Modular technology
●		●		Handle and dish polyamide
	●		●	Handle zinc die and dish polyamide
				Handle and dish zinc die
				Handle and dish stainless steel
	●			fitting escutcheons

© EMKA Beschlagteile GmbH & Co. KG • 2016 • www.emka.com

EMKA®

Beschlagteile

Notes:

Swinghandle Program 1107

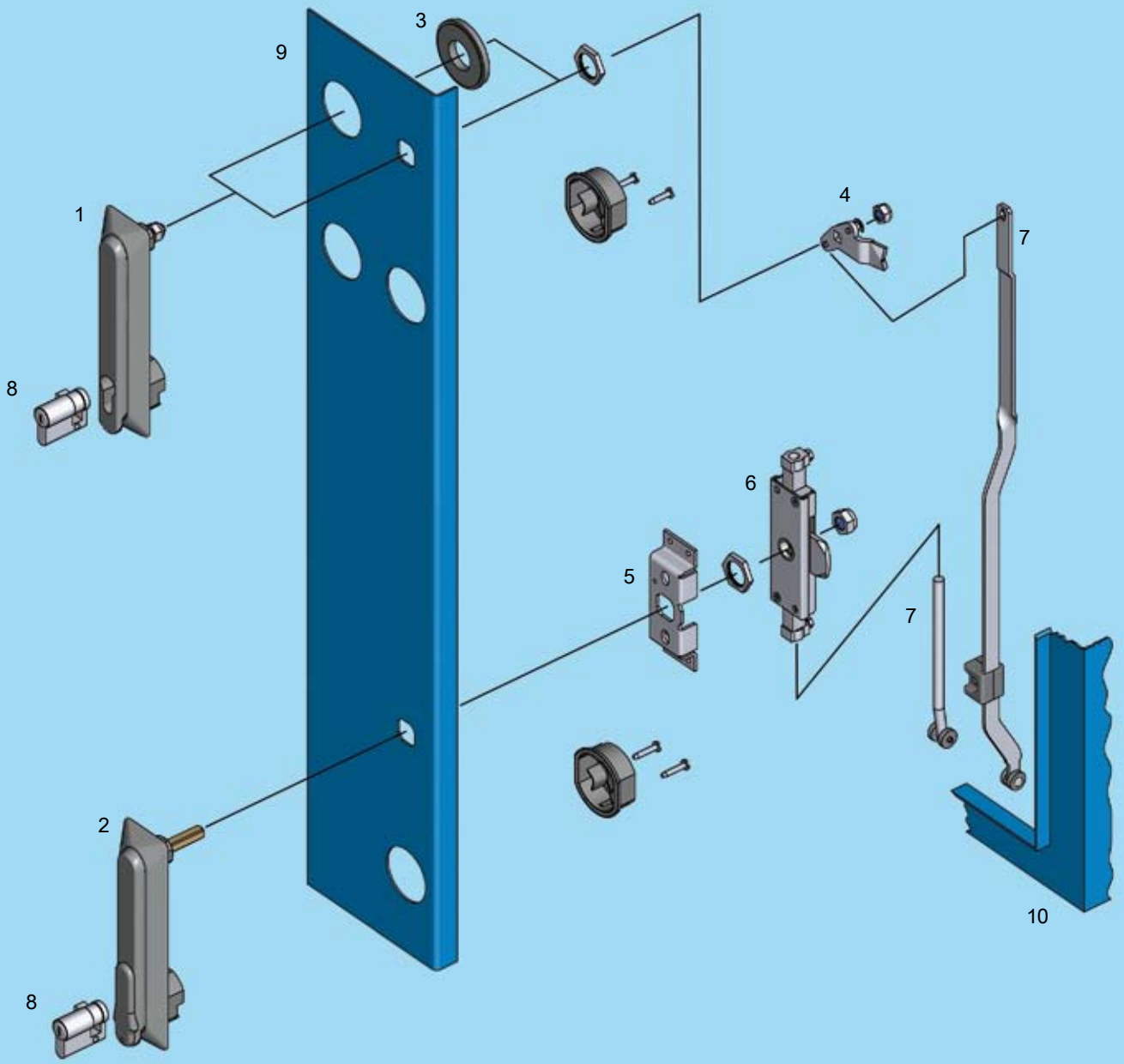

1	Swinghandle	3A-120, 3A-140
2	Swinghandle	3A-220
3	Adapter ring	
4	Cam	
5	Support	
6	Rod control	
7	Rod	
8	Profile half cylinder	
9	Door	
10	Cabinet/frame	

EMKA®

Beschlagteile

Swinghandle

PROGRAM 1107

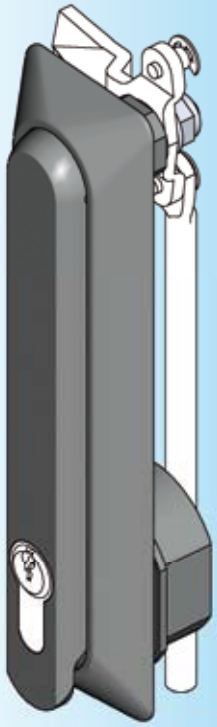

Version A Version B

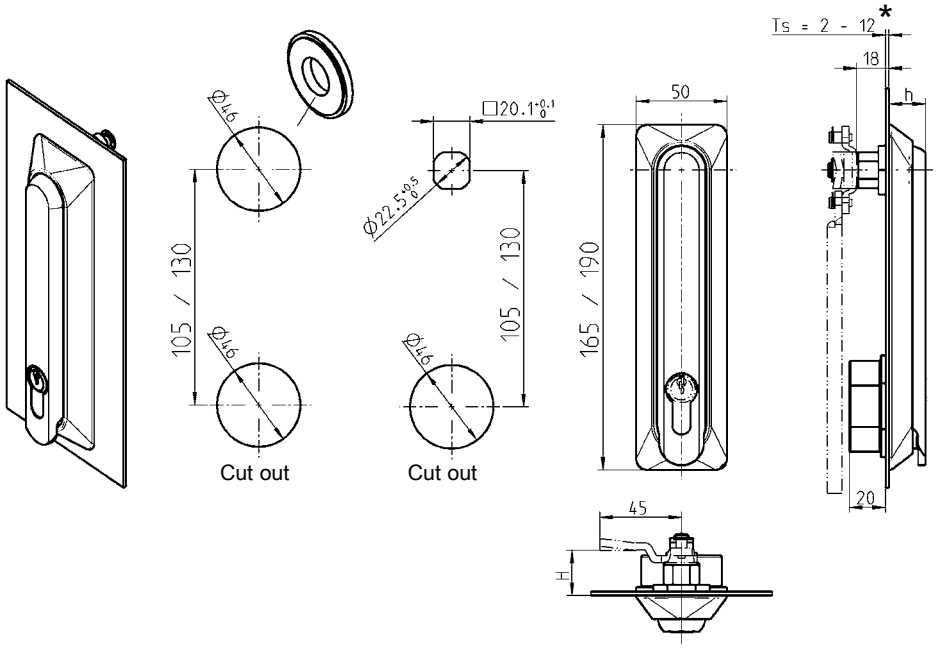

Attention:
With adapter the maximum door gauge (TS) will be 6 mm

Note:
If door gauge (Ts) > 4 mm standard round rods cannot be used!

Swing handle "long" or "short" hande polyamide GF black; dish polyamide GF VO black;shaft brass; cylinder cover polyamide GF black; Fixing material m.s. zinc plated; with seal	
Swing handle "long" (190) without cylinder cover	
for 40 mm profile half cylinder (h = 20 mm)	1107-U1-G
Swing handle "long" (190) with cylinder cover sealable	
for 40 mm profile half cylinder (h = 20 mm)	1107-U2-G
for 40 mm profile half cylinder (h=20 mm) (handle zinc die black powder coated)	1107-U102-G
for 45 mm profile half cylinder (h=25 mm)	1107-U32-G
Swing handle "short" (165) without cylinder cover	
for 40 mm profile half cylinder (h=20 mm)	1107-U158-G
Swing handle "short" (165) with cylinder cover sealable	
for 40 mm profile half cylinder (h=20 mm)	1107-U159-G
for 45 mm Profile half cylinder (h=25 mm)	1107-U169-G
Adapter polyamide GF black required for cut out version A	
	1107-53
* Order screw set separately if Ts = 4-12 mm	1107-U170

Further parts see page
– Cam 3YC-120
– Rod control for cam 3YC-180
– Profile half cylinder 3XB-120

© EMKA Beschlagteile GmbH & Co. KG • 2016 • www.emka.com

Swinghandle for padlock

PROGRAM 1107

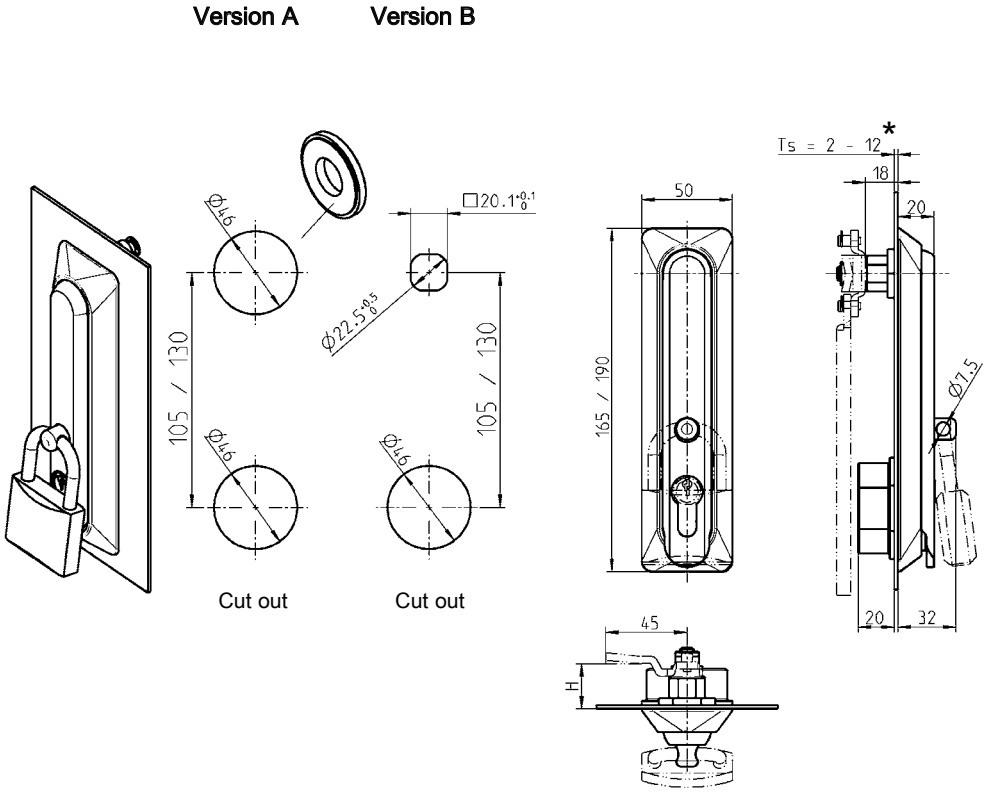

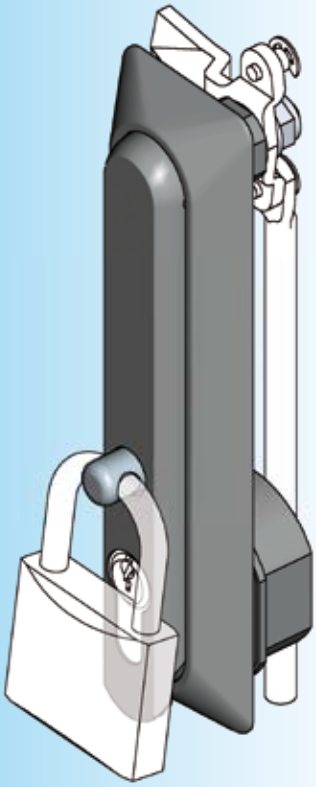

Attention:
With adapter the maximum door gauge (TS) will be 6 mm

Note:
If door gauge (Ts) > 4 mm standard round rods cannot be used!

Swing handle "long" or "short" handle polyamide GF black; dish polyamide GF V0 black; shaft brass; padlock shackle AISI 303;fixing material m.s. zinc plated; with seal	
Swing handle "long" (190)	
for 40 mm profile half cylinder	1107-U96-G
Swing handle "short" (165)	
for 40 mm profile half cylinder	1107-U164-G
Adapter polyamide GF black required for cut out version A	
	1107-53
* Order screw set separately if Ts = 4-12 mm	1107-U170

Further parts see page
– Cam 3YC-120
– Rod control for cam 3YC-180
– Profile half cylinder 3XB-120

© EMKA Beschlagteile GmbH & Co. KG • 2016 • www.emka.com

EMKA®

Beschlagteile

Swinghandle

PROGRAM 1107

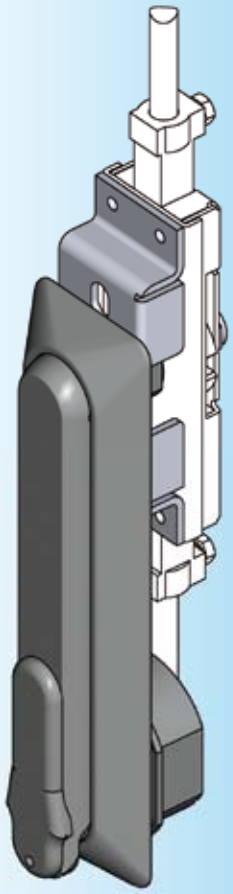

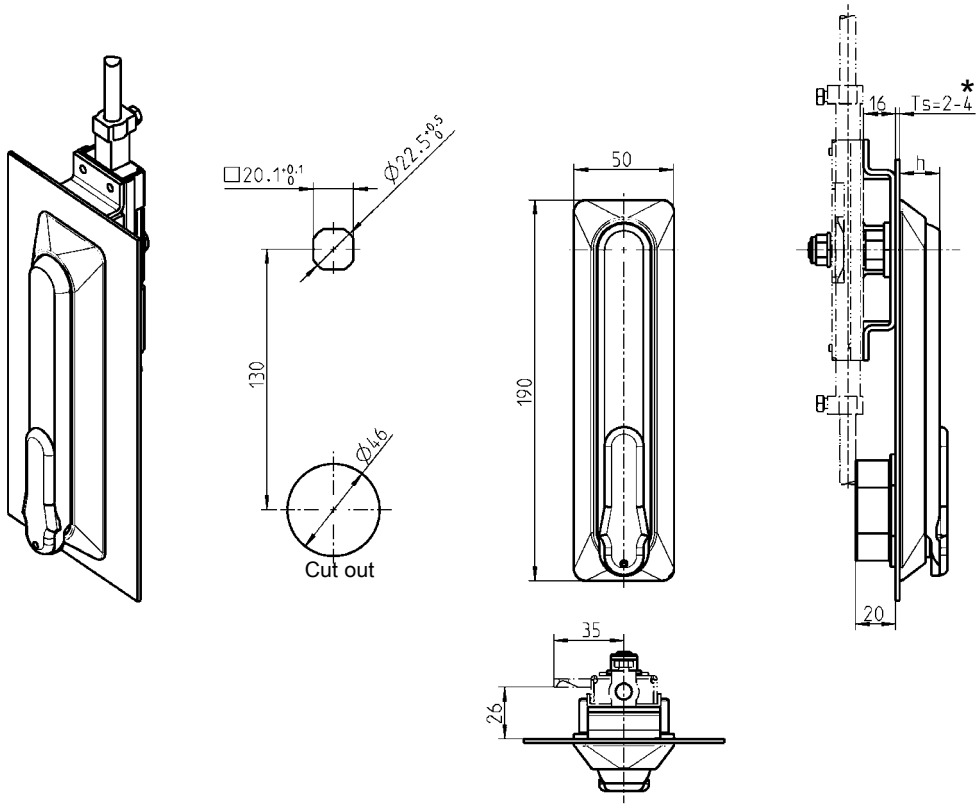

Handle material as requested; dish polyamide GF V0 black; cylinder cover sealable polyamide GF black; shaft brass; fixing material m.s. zinc plated; with seal; for 40 mm profile half cylinder (h=20 mm)	
Handle polyamide GF black	1107-U14-G
Handle zinc die black p.c.	1107-U104-G
Support m.s. zinc plated	
RH and LH version	1001-50

* Ts > 4-11 on request

Further parts see page

– Rod control 2B-130
2B-135
– Profile half cylinder 3XB-120

© EMKA Beschlagteile GmbH & Co. KG • 2016 • www.emka.com

Swinghandle
Program 1317

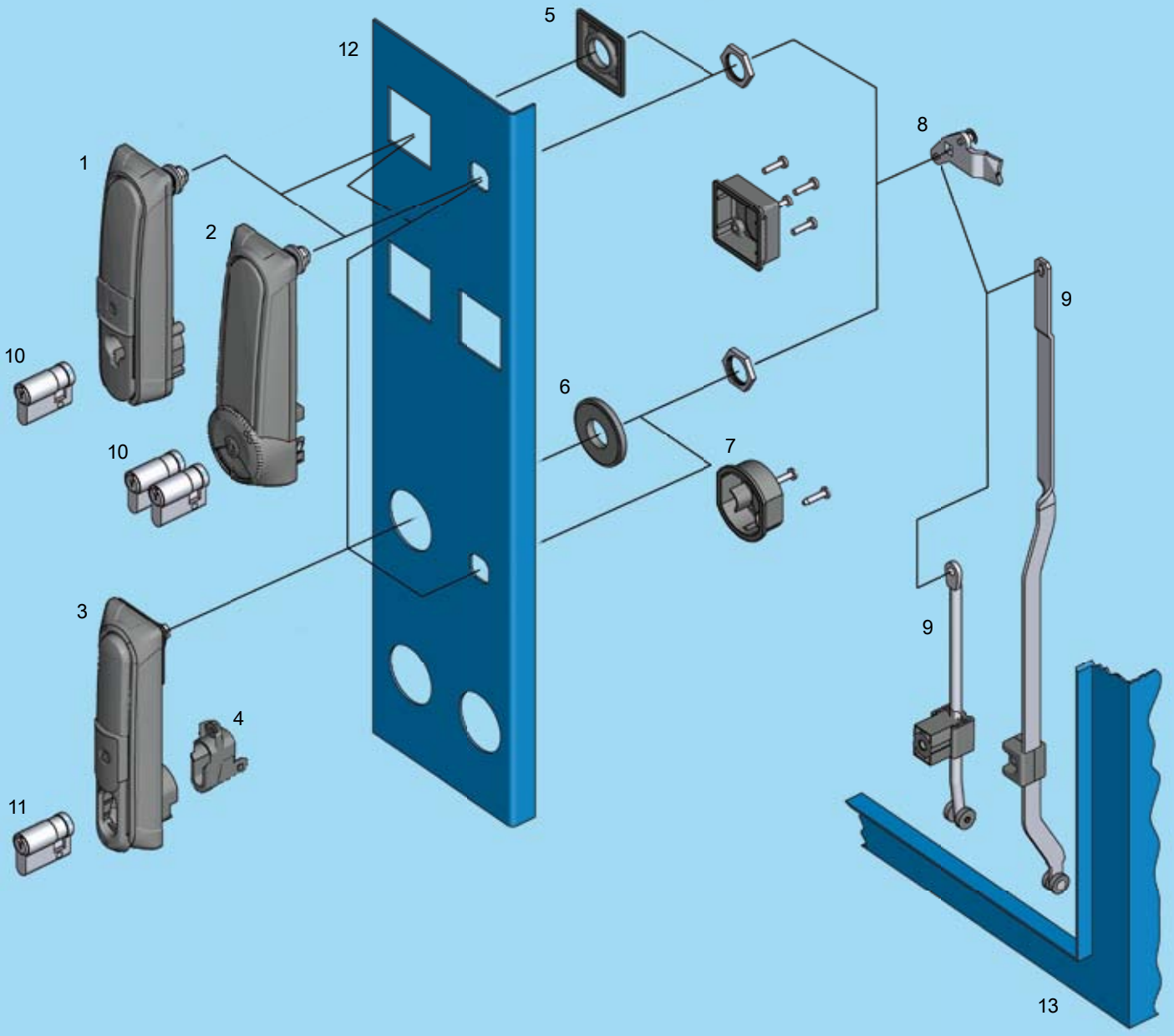

1	Swinghandle with RC2	3AB-120
2	Swinghandle with RC2 (double cylinder)	3AB-160
3	Swinghandle for the new locking set series	3AB-140
4	Locking set	
5	Adapter frame	
6	Adapter ring (not included in the delivery)	
7	Dust cap (not included in the delivery)	
8	Cam	
9	Rod	
10	Profile half cylinder	
11	Locking options, e.g. profile half cylinder	
12	Door	
13	Cabinet/frame	

Swinghandle with RC2; mechanical or electromechanical release

PROGRAM 1317

Single cylinder-swinghandle

Size:	„long“ (189.5 mm; cut out 130 mm)
or	„short“ (164.5 mm; cut out 105 mm)
Material:	GD-Zn black powder coated or GD-Zn grey powder coated (RAL 7038) and anti-graffiti coated

Mechanical version:

Profile half cylinder:	40 mm and 45 mm; adjust cam to 3 o‘clock
Sealable:	yes

Electromagnetic version (EL):

Application:	Indoor and outdoor at -30°C to +80°C
Release:	by inputting a 48 V DC signal
Power-on time:	up to 1 minute
Display:	optional by LED
Telemonitoring:	by reed contact
Close:	Press the handle in the escutcheon until the locking mechanism engages
Emergency opening:	optional with 40 mm or 45 mm profile half cylinder
Four eyes principle:	On request! To open it, the enable signal and an unlocked profile half cylinder are necessary

Version A **Version B**

* Ts > 6 mm -12 mm on request

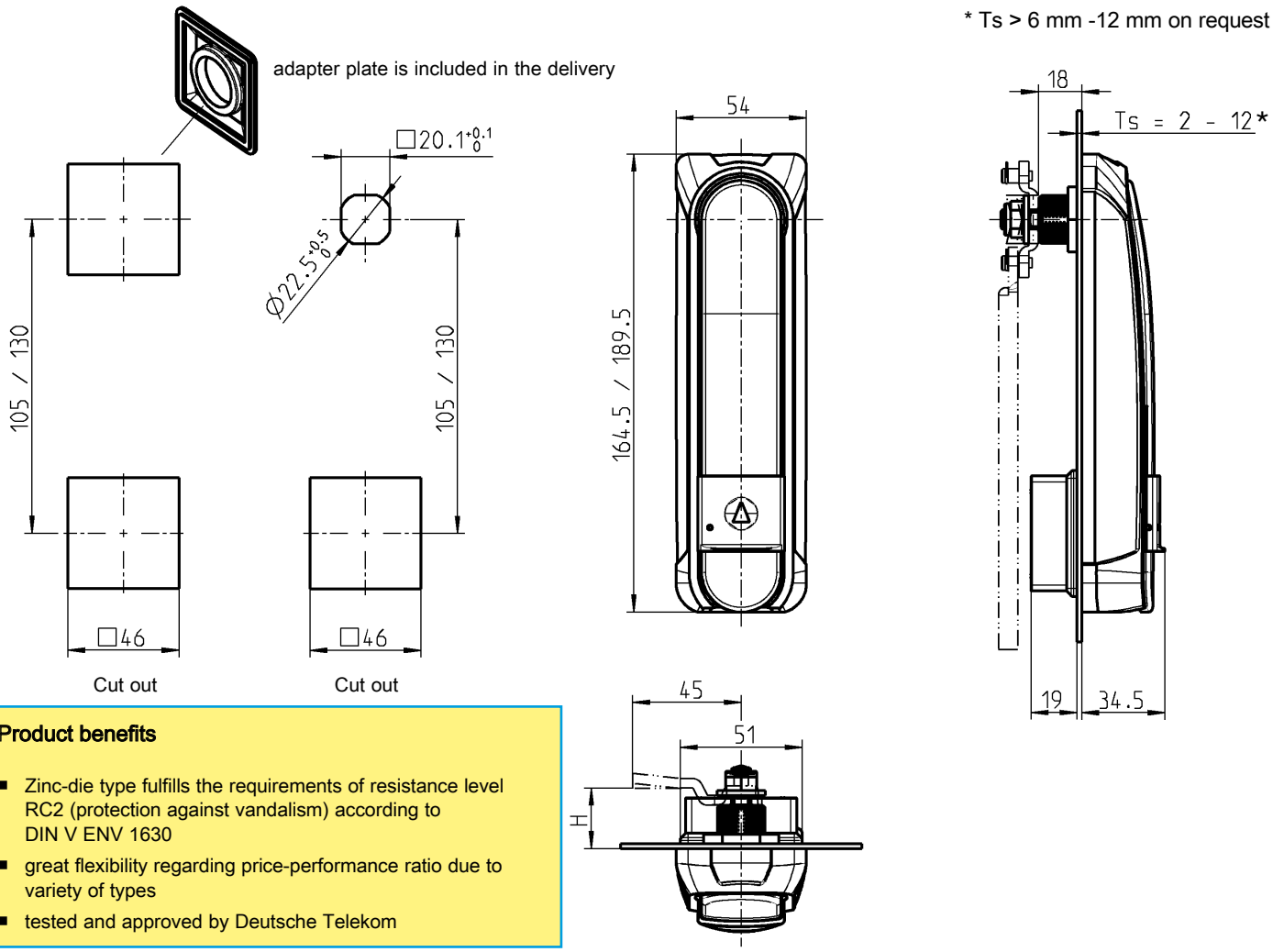

Product benefits

- Zinc-die type fulfills the requirements of resistance level RC2 (protection against vandalism) according to DIN V ENV 1630
- great flexibility regarding price-performance ratio due to variety of types
- tested and approved by Deutsche Telekom

Attention:
With use of an adapter plate the maximum door gauge (Ts) is 6 mm.

Note:
The use of circular standard rod is not possible with a door gauge (Ts) > 6 mm!

** With the mechanical version the push button profile half cylinder is not applicable.
With the electromechanical version only the profile half cylinder according to DIN 18252 (EN 1303)is applicable.

© EMKA Beschlagteile GmbH & Co. KG • 2016 • www.emka.com

New defined standards
- The swinghandle successfully passed the test in accordance to RC2 DIN V ENV 1630.
- The test in accordance to protection level IK 10 following DIN EN 50102 was passed successfully.
- an integrated scratch-protection prevents damage to the surface (handle/escutcheon).

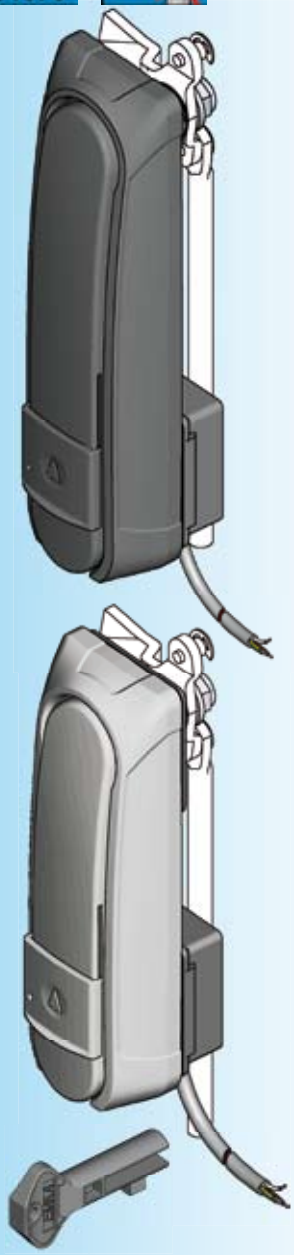

Swing handle "long" or "short" dish and handle zinc die, surface on request	
Swinghandle "long" (189.5) GD-Zn black powder coated	
mechanical version for 40 mm profile half cylinder, with additional cam position 30°	1317-U122
mechanical version for 45 mm profile half cylinder	1317-U123
mechanical version for type KABA 1514	on request
electromechanical version without LED optional for 40 and 45 mm profile half cylinder	1317-U161-02
electromechanical version with LED optional for 40 and 45 mm profile half cylinder	1317-U162-02
Swinghandle "long" (189,5) GD-Zn grey powder coated (RAL 7038) and anti-graffiti coated	
mechanical version for 40 mm profile half cylinder, with additional cam position 30°	1317-U122-HJ
mechanical version for 45 mm profile half cylinder	1317-U123-HJ
mechanical version for type KABA 1514	on request
electromechanical version without LED optional for 40 and 45 mm profile half cylinder	1317-U161-02HJ
electromechanical version with LED optional for 40 and 45 mm profile half cylinder	1317-U162-02HJ
Swinghandle "short" (164.5) GD-Zn black powder coated	
mechanical version for 40 mm profile half cylinder, with additional cam position 30°	1317-U102
mechanical version for 45 mm profile half cylinder	1317-U103
mechanical version for type KABA 1514	1317-U131
electromechanical version without LED optional for 40 and 45 mm profile half cylinder	1317-U151-02
electromechanical version with LED optional for 40 and 45 mm profile half cylinder	1317-U152-02
Swinghandle "short" (164.5) GD-Zn grey powder coated (RAL 7038) and anti-graffiti coated	
mechanical version for 40 mm profile half cylinder, with additional cam position 30°	1317-U102-HJ
mechanical version for 45 mm profile half cylinder	1317-U103-HJ
mechanical version for type KABA 1514	1317-U131-HJ
electromechanical version without LED optional for 40 and 45 mm profile half cylinder	1317-U151-02HJ
electromechanical version with LED optional for 40 and 45 mm profile half cylinder	1317-U152-02HJ
Building key polyamide black	
	1004-44-01AA

Note:
The electromechanical version is also available in 12 V DC on request.

Further parts see page
– Cam 3YC-120
– 3-point cam 3YC-180
– ** Profile half cylinder 3XB-120

© EMKA Beschlagteile GmbH & Co. KG • 2016 • www.emka.com

Swing handle with modular locking system

PROGRAM 1317

Single cylinder-swinghandle

Size:	„long“ (188 mm; cut out 130 mm)
or	„short“ (163 mm; cut out 105 mm)
Material:	polyamide black
Profile half cylinder:	40 mm 45 mm
Sealable:	yes, bore hole in dish necessary

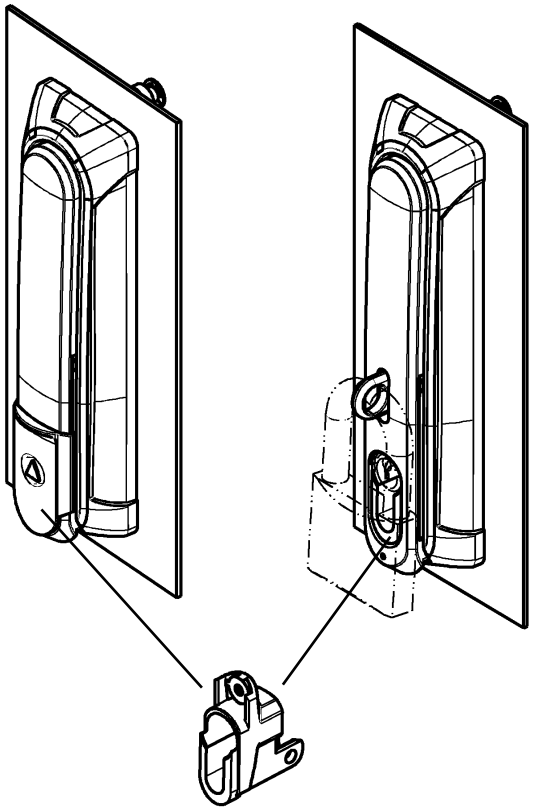

with modular locking

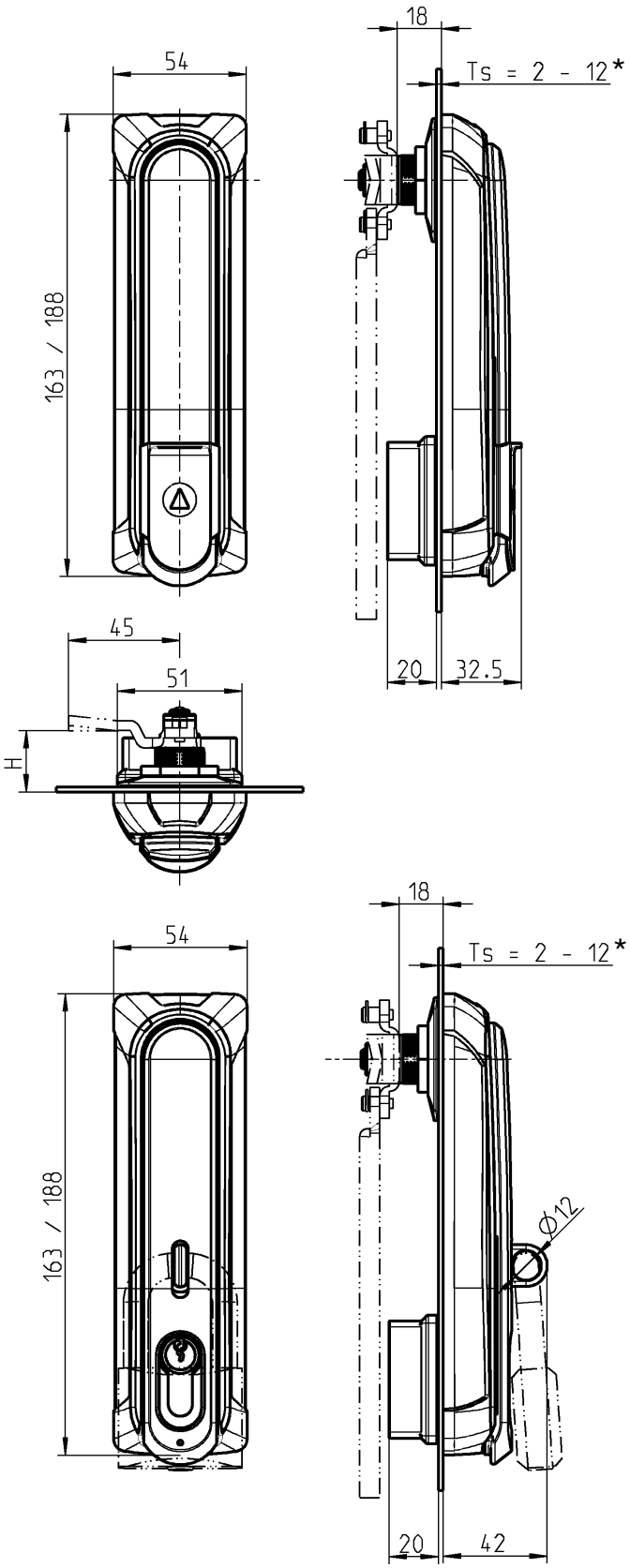

Attention:
If the adapter plate or the adapter ring is used, the maximum door gauge (Ts) is 6 mm (with cut out version A and C)

Note:
If door gauge (Ts) > 4 mm standard round rods cannot be used!

© EMKA Beschlagteile GmbH & Co. KG • 2016 • www.emka.com

Version A Version B

Adapter plate is included in the delivery

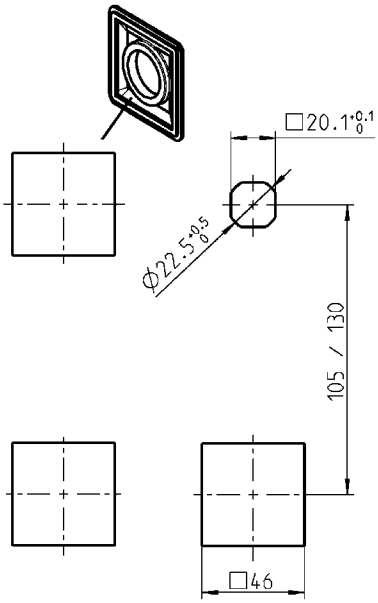

Cut out Cut out

Version C Version D

Adapter ring not included in the delivery

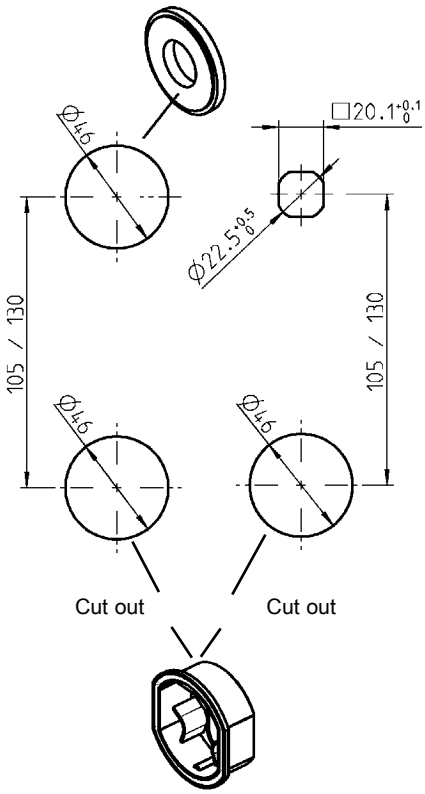

Cut out Cut out

Cap not included in the delivery

New defined standards

– ergonomic surface feel
– variable locking options
– integrated scratch protection prevents surface damage (handle / dish).

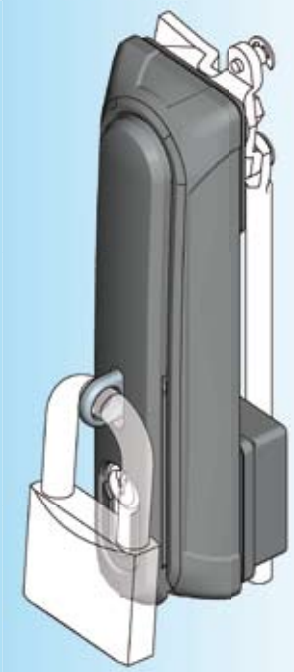

Swing handle "long" or "short"
handle polyamide GF black; dish polyamide GF black;
cylinder cover polyamide GF black (not for swing handle for padlock);
shaft brass and POM GF black;
padlock shackle AISI 316 (for swing handle for padlock);
cap polyamide GF V0 black;
adapter plate polyamide GF V0 black for cut out Version A;
fixing material m.s. zinc plated; with seal

❶ (please order locking system separately) ❷ (in case of profile half cylinder, the locking cam has to be set at 90°)	without locking system ❶	with locking set for profile half cylinder ❷	
		40 mm (A = 30 mm)	45 mm (A = 35 mm)
Swinghandle "long"	1317-U421	1317-U421-01	1317-U423-01
Swing handle "long" for padlock	1317-U426	1317-U426-01	on request
Swinghandle "short"	1317-U401	1317-U401-01	1317-U403-01
Swing handle "short" for padlock	1317-U406	1317-U406-01	on request
needed for cut out C and D			
Adapter ring polyamid GF V0 black			1107-53
Cap polyamid VO black			1107-11-03AA
* Order screw set separately if Ts = 4-12 mm			1107-U170

Locking set for different key systems (see catalogue page 3BA-220)

Further parts see page
– Profile half cylinder 3XB-120

– Locking set 3XC-120
– Cams 3YC-120
– 3-point cam 3YC-180

© EMKA Beschlagteile GmbH & Co. KG • 2016 • www.emka.com

Double cylinder swinghandle with RC2

PROGRAM 1317

Double cylinder-swinghandle

Size:	„long“ (189.5 mm; cut out 130 mm)
or	„short“ (164.5 mm; cut out 105 mm)
Material:	zinc die black p.c.
or	GD-Zn grey powder coated (RAL 7038) and anti-graffiti coated
or	polyamide black
or	Polyamide GF grey (RAL 7038)
	Polyamide anti-graffiti coated on request
RC2:	Swinghandle from GD-Zn
Profile half cylinder:	40 mm and 45 mm; adjust locking cam on 6 o‘clock. Profile half cylinder on the right hand also possible on 5 o‘clock.
key removable:	always removable or when the handle is put in
Sealable:	yes, hole Ø2 mm in the handle is necessary

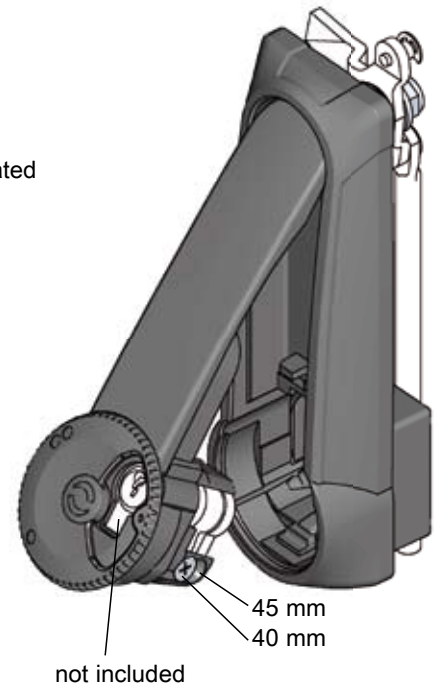

Version A **Version B**

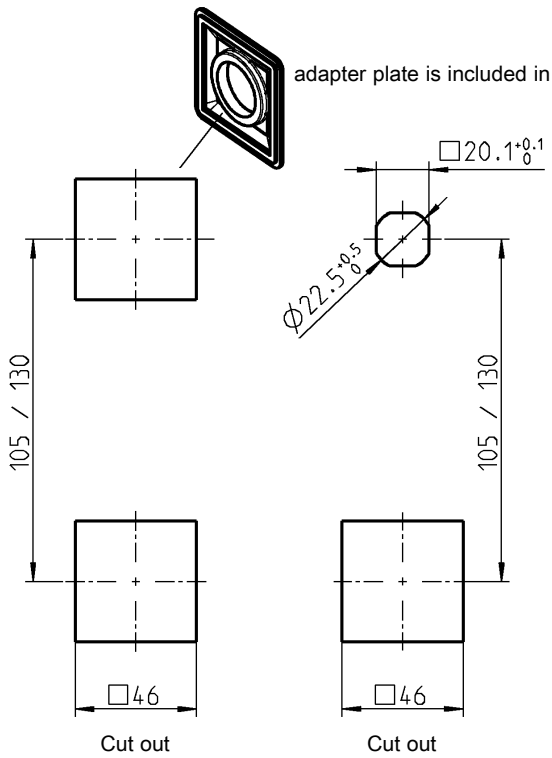

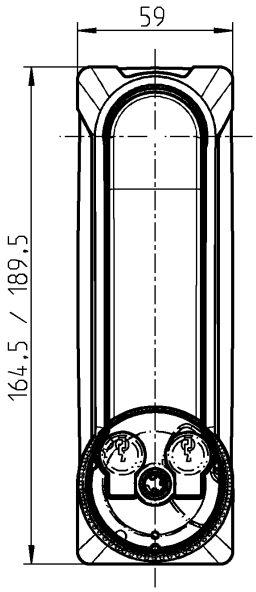

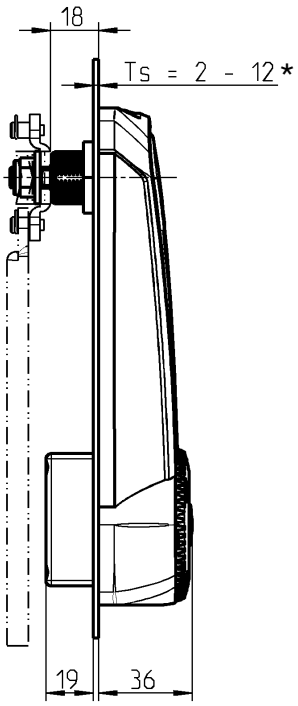

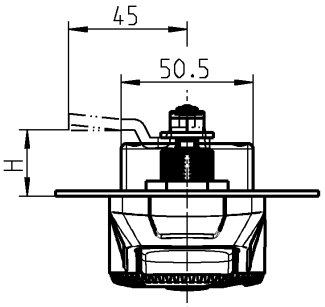

Product benefits

- Zinc-die type fulfills the requirements of resistance level RC2 (protection against vandalism) according to DIN V ENV 1630
- great flexibility regarding price-performance ratio due to variety of types
- tested and approved by Deutsche Telekom

Attention:
When using the adapter ring the maximum door gauge (TS) will be 6 mm.

Note:
The use of circular standard rod is not possible with a door gauge (Ts) > 6 mm!

* Ts > 6-12 on request

© EMKA Beschlagteile GmbH & Co. KG • 2016 • www.emka.com

New defined standards
- The swinghandle from GD-Zn passed the test according to RC2 DIN V ENV 1630 successfully.
- The protection level test IK 10 following the DIN EN 50102 was passed successfully with the swinghandles from zinc die.
- an integrated scratch-protection prevents damage to the surface (handle/escutcheon).

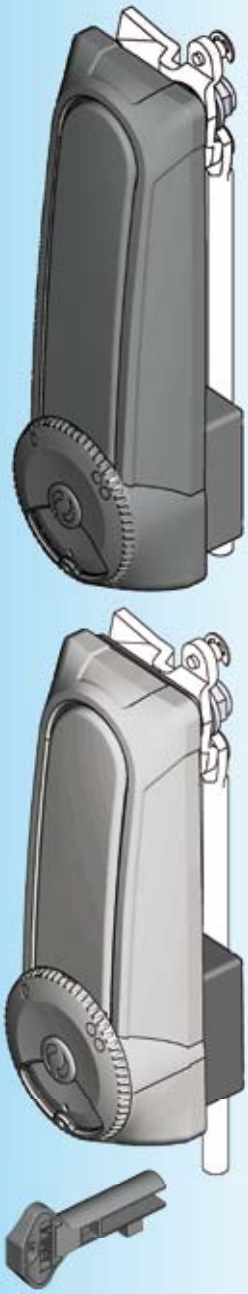

Swing handle "long" or "short"
dish and handle type as requested;
shaft brass or brass and POM GF black;
cylinder cover zinc die black powder coated or grey powder coated (RAL 7038);
cap zinc die black powder coated or polyamide GF V0 black;
adapter plate Polyamide GF V0 black for cut out version A;
fixing material m.s. zinc die; with seal and spring

Swinghandle "long" (189.5) **Version of choice:** **1. GD-Zn black powder coated; cap GD-Zn black powder coated; shaft brass** **2. Polyamide GF black; cap polyamide GF V0 black; shaft brass and POM GF black**	
1. GD-Zn (RC2); key always removable	1317-U221
1. GD-Zn (RC2); key removable when the handle is put in	1317-U222
2. Polyamide; key always removable	1317-U321
2. Polyamide; key removable when the handle is put in	1317-U322
Swinghandle "long" (189.5) **Version of choice:** **1. GD-Zn grey powder coated (RAL 7038) and anti-graffiti coated; cap GD-Zn black powder coated; shaft brass** **2. Polyamide GF grey (RAL 7038); cap polyamide GF V0 black; shaft m.s. zinc plated**	
1. GD-Zn (RC2); key always removable	1317-U221-HJ
1. GD-Zn (RC2); key removable when the handle is put in	1317-U222-HJ
2. Polyamide; key always removable	1317-U321-BO
2. Polyamide; key removable when the handle is put in	1317-U322-BO
Swinghandle "short" (164.5) **Version of choice:** **1. GD-Zn black powder coated; cap GD-Zn black powder coated; shaft brass** **2. Polyamide GF black; cap polyamide GF V0 black; shaft brass and POM GF black**	
1. GD-Zn (RC2); key always removable	1317-U201
1. GD-Zn (RC2); key removable when the handle is put in	1317-U202
2. Polyamide; key always removable	1317-U301
2. Polyamide; key removable when the handle is put in	1317-U302
Swinghandle "short" (164.5) **Version of choice:** **1. GD-Zn grey powder coated (RAL 7038) and anti-graffiti coated; cap GD-Zn black powder coated; shaft brass** **2. Polyamide GF grey (RAL 7038); cap polyamide GF V0 black; shaft brass and POM GF black**	
1. GD-Zn (RC2); key always removable	1317-U201-HJ
1. GD-Zn (RC2); key removable when the handle is put in	1317-U202-HJ
2. Polyamide; key always removable	1317-U301-BO
2. Polyamide; key removable when the handle is put in	1317-U302-BO
Building key polyamide black	
	1004-44-01AA

Further parts see page
– Cam 3YC-120
– 3-point cam 3YC-180
– Profile half cylinder 3XB-220

© EMKA Beschlagteile GmbH & Co. KG • 2016 • www.emka.com

EMKA®

Beschlagteile

Notes:

Swinghandle and escutcheon Program 1125

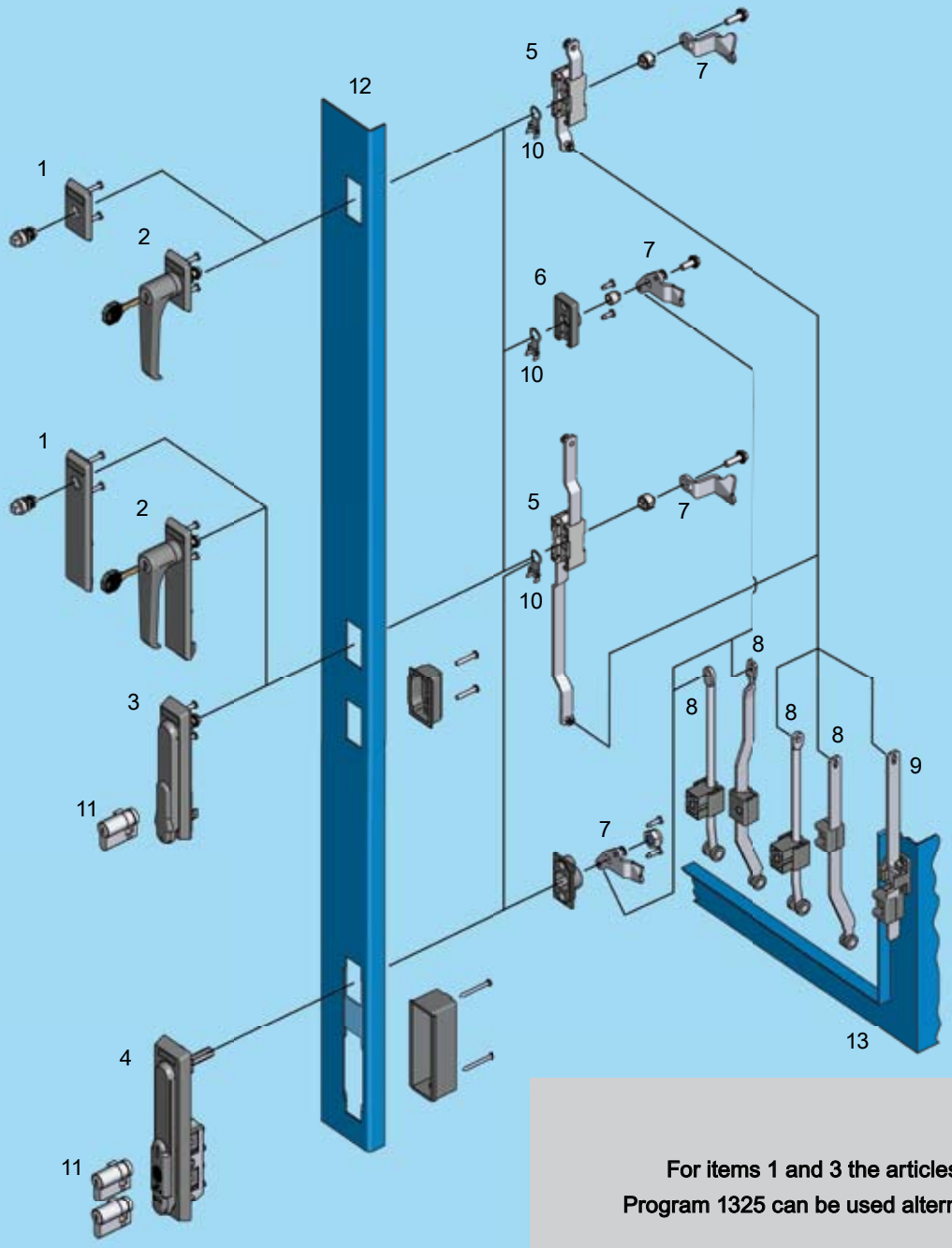

For items 1 and 3 the articles of Program 1325 can be used alternatively.

1	Escutcheon 1121 with insert	3B-120
2	Escutcheon 1123 with handle	3B-180
3	Swinghandle	3B-220, 3B-420
4	Swinghandle (double cylinder)	3B-320
5	Rod control	
6	Bearing bush	
7	Cam	
8	Rod (inside the gasketing)	
9	Rod (outside the gasketing)	
10	Earthing device	
11	Profile half cylinder	
12	Door	
13	Cabinet/frame	

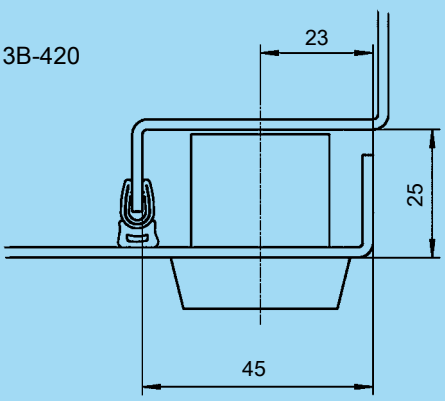

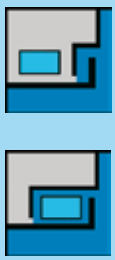

EMKA®

Beschlagteile

Escutcheon 1121 with insert

PROGRAM 1125

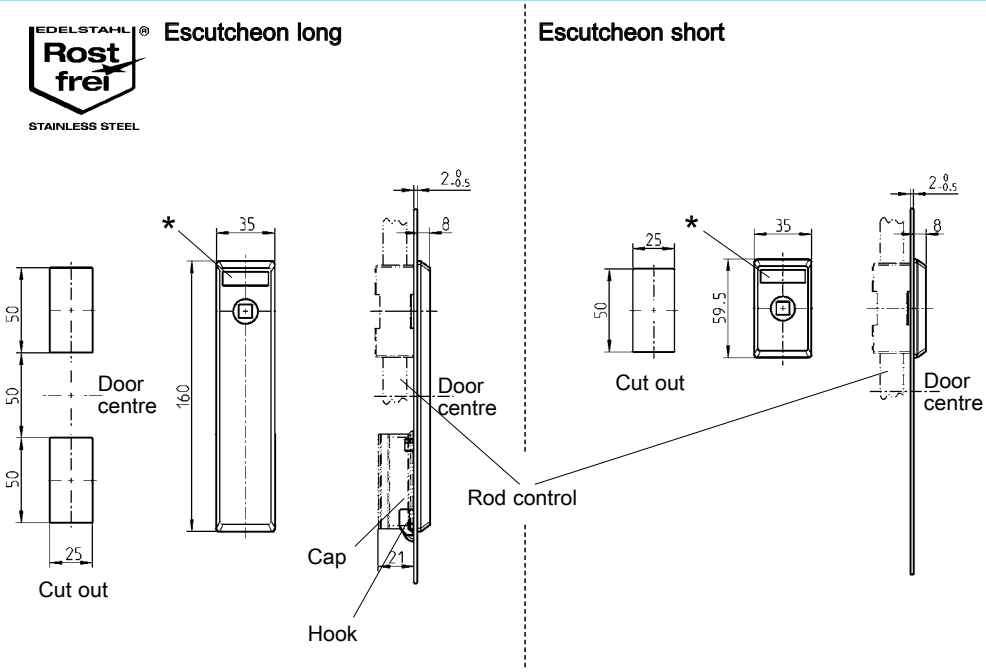

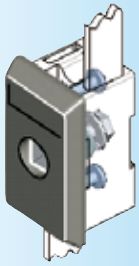

Escutcheon long material on choice, screws m.s. zinc plated or stainless steel, with seal				Escutcheon short material on choice, screws m.s. zinc plated or stainless steel with seal IP 65
polyamide black	hook IP 40	clip-in cap IP 40	screw-on cap IP 65	
for square, triangular Daimler-Benz, slot	1121-U19-6	1121-U19-N6	1121-U133-6	1121-U22-6
for double bit	1121-U20-6	1121-U20-N6	1121-U134-6	1121-U23-6
for railroad, square 9	1121-U19A-6	–	1121-U135-6	1121-U22A-6
for FIAT	1121-U63-6	1121-U63-N6	1121-U132-6	1121-U62-6
AISI 316				
for square, triangular Daimler-Benz, slot	–	–	1121-U133-6PH	1121-U22-6PH

Insert material on choice, fixing material m.s. zinc plated or stainless steel		
	zinc die chrome pl.	AISI 316
Square 6	1121-U11	on request
Square 7	1121-U12	1121-U12-PH
Square 8	1121-U13	on request
Triangular 6,5 CNOMO	1121-U169	on request
Triangular 7	1121-U14	1121-U14-PH
Triangular 8	1121-U15	on request
Double bit 3**	1121-U16	1121-U16-PH
Double bit 5**	1121-U17	1121-U17-PH
Square female 8	1121-U167	on request
Daimler Benz	1121-U18	on request
Slot 2 x 4	1121-U123	on request
FIAT	1121-U24	on request
Railroad square 9	1121-U72	on request

* Logo recess: 27 x 8 x 0,5
Multicolour print possible

** in Polyamide on request

Further parts see page

– Key	12B-120
– Rod control for long version	3YA-110
	3YA-120
	3YA-140
(only with hook)	3YA-190
Short version	3YA-115
	3YA-160
– Bearing bush	3YB-120

Accessories

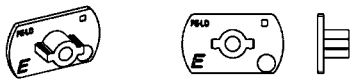

Transport safety device polyamide GF black for double bit insert

1121-32

© EMKA Beschlagteile GmbH & Co. KG • 2016 • www.emka.com

Escutcheon for quarterturn, program 1000

PROGRAM 1125

EDELSTAHL Rost frei STAINLESS STEEL

RL IP 65

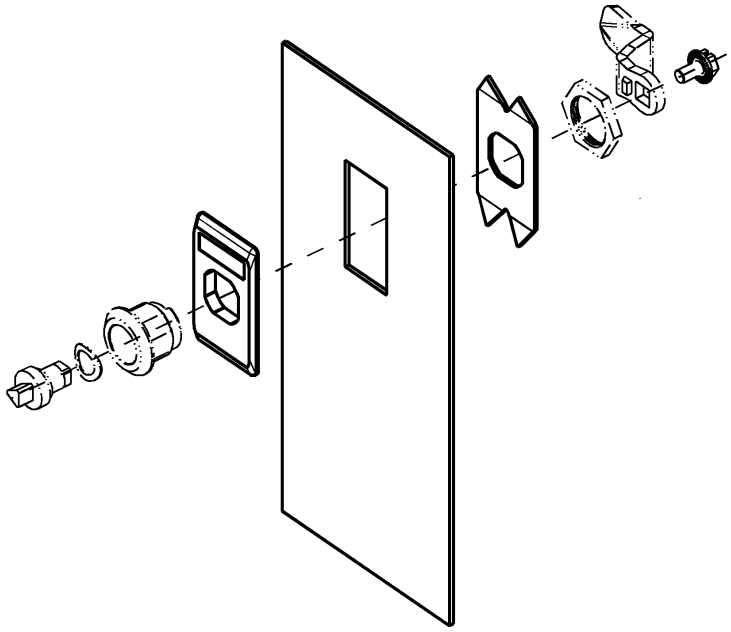

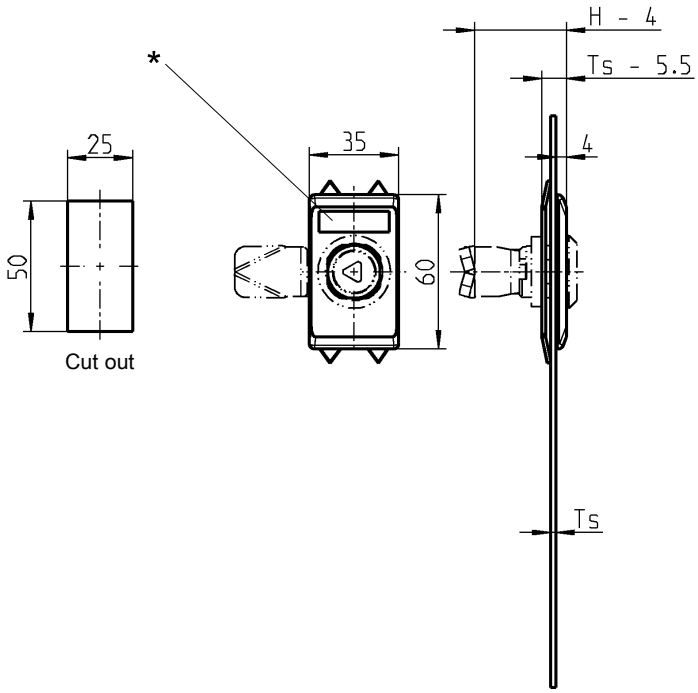

* Logo recess: 27 x 8 x 0,5
Multicolour print possible

Attention:
H-dimension of cam is 4 mm less, TS is 5,5 mm less

Note:
IP 65 will be achieved by quarter turn with IP 65 protection

Further parts see page

– Quarter turn		1B-120
		1B-140
		1B-210
	up to	1B-320
		1B-360
	up to	1B-620
		1B-680
		1B-860

Escutcheon polyamide black, earthing plate m.s. zinc plated, with seal

1121-U168

© EMKA Beschlagteile GmbH & Co. KG • 2016 • www.emka.com

Escutcheon 1123 with handle

PROGRAM 1125

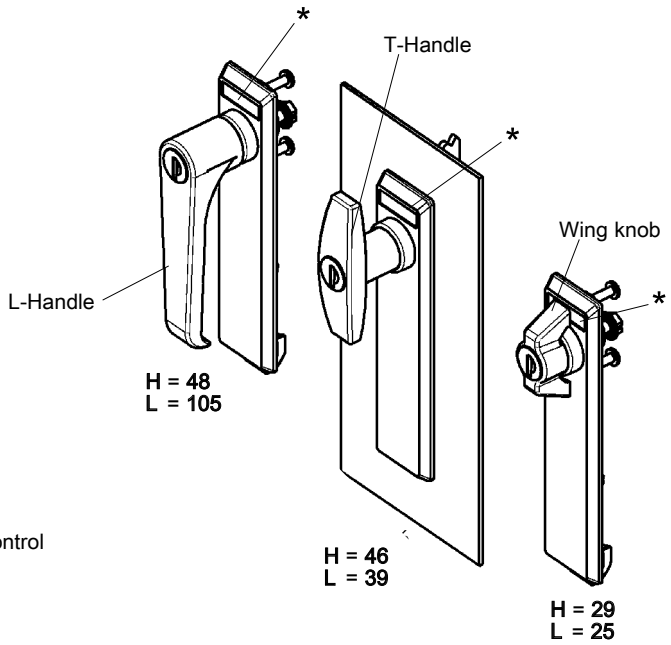

Each round cylinder has one silver steel key with polyamide grip GF black.

Escutcheon long

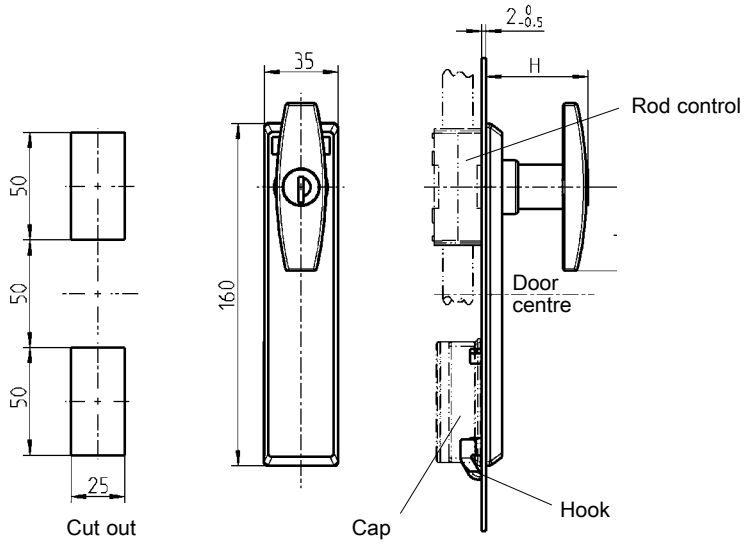

Escutcheon long polyamide GF black,fixing material m.s. zinc pl. or stainless steel, with seal			
	hook IP 40	snap on cap IP 40	screw on cap IP 65
Wingknob zinc die black powder coated			
non locking	1123-U1-6	1123-U1-N6	1123-U25-6
keyed EK 333	1123-U2-6	1123-U2-N6	1123-U26-6
keyed different	1123-U3-6	1123-U3-N6	1123-U27-6
Wing knob AISI 316			
non locking	1123-U41-6	1123-U41-N6	1123-U42-6
T-Handle zinc die black powder coated			
non locking	1123-U7-6	1123-U7-N6	1123-U28-6
keyed EK 333	1123-U8-6	1123-U8-N6	1123-U29-6
keyed different	1123-U9-6	1123-U9-N6	1123-U30-6
prepared for KABA 1036	1123-U21-6	–	–
T-handle AISI 316			
non locking	1123-U38-6	1123-U38-N6	1123-U39-6
L-Handle zinc die black powder coated			
non locking	1123-U13-6	1123-U13-N6	1123-U31-6
keyed EK 333	1123-U14-6	1123-U14-N6	1123-U32-6
keyed different	1123-U15-6	1123-U15-N6	1123-U33-6
prepared for KABA 1036	1123-U19-6	–	–
L-handle AISI 316			
non locking	1123-U34-6	1123-U34-N6	1123-U35-6

© EMKA Beschlagteile GmbH & Co. KG • 2016 • www.emka.com

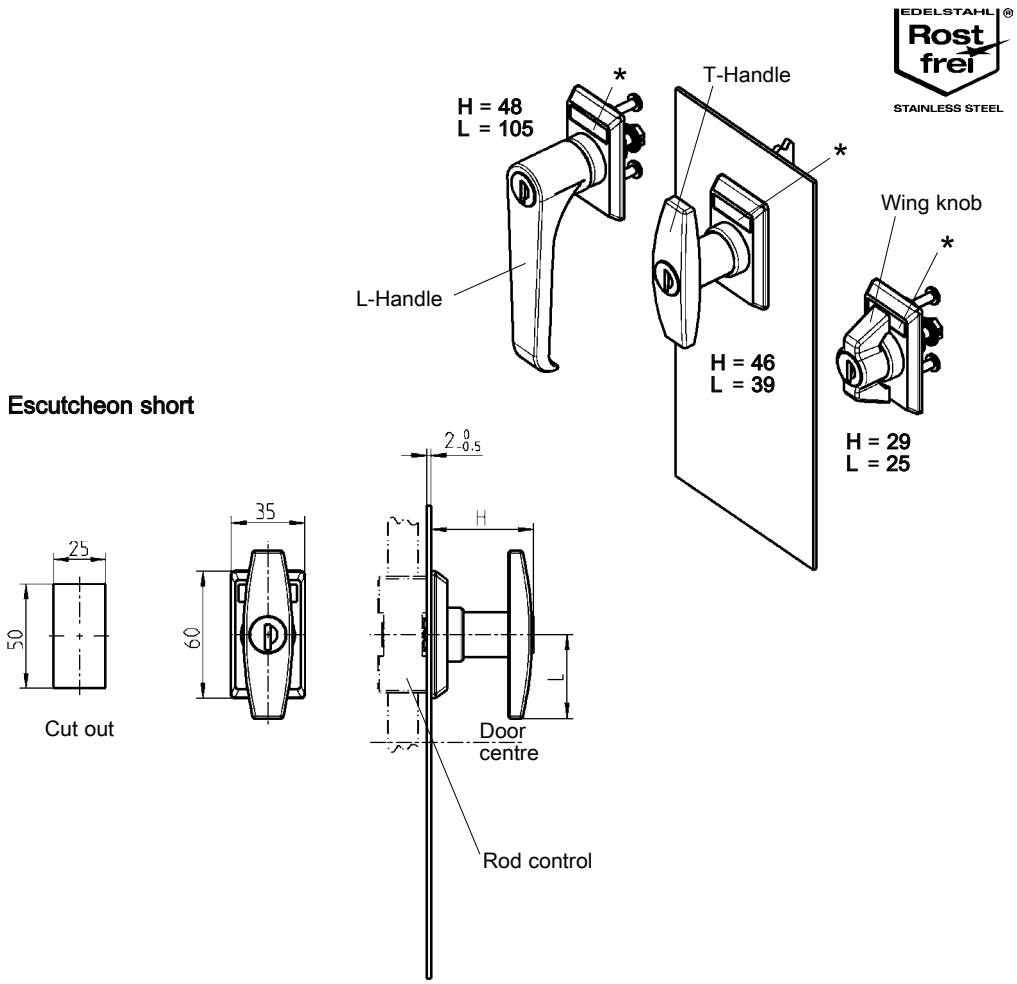

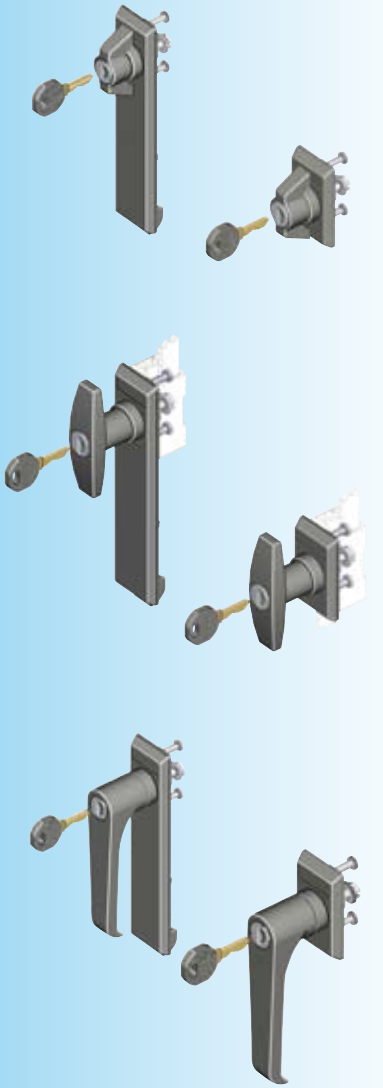

Ecscutcheon short polyamide Gf black, fixing material m.s. zinc pl. or stainless steel, with seal IP 65	
Wing knob zinc die black powder coated	
non locking	1123-U4-6
keyed EK 333	1123-U5-6
keyed different	1123-U6-6
Wing knob AISI 316	
non locking	1123-U40-6
T-Handle zinc die black powder coated	
non locking	1123-U10-6
keyed EK 333	1123-U11-6
keyed different	1123-U12-6
prepared for KABA 1036	1123-U22-6
T-handle AISI 316	
non locking	1123-U37-6
L-Handle zinc die black powder coated	
non locking	1123-U16-6
keyed EK 333	1123-U17-6
keyed different	1123-U18-6
prepared for KABA 1036	1123-U20-6
L-handle AISI 316	
non locking	1123-U36-6

* Logo recess: 27 x 8 x 0,5
Multicolour print possible

Further parts see page

– Key	12B-120
– Spare key	12B-140
– Rod control for long version	3YA-110
	3YA-120
	3YA-140
(only with hook)	3YA-190
Short version	
	3YA-115
	3YA-160
– Bearing bush	3YB-120
– Dust cap for T-Handle	1C-340

© EMKA Beschlagteile GmbH & Co. KG • 2016 • www.emka.com

Swinghandle

PROGRAM 1125

Example:
[3] (21/26 mm)
→ Dimension for profile half cylinder 45 mm
→ Dimension for profile half cylinder 40 mm

Swinghandle polyamide black for profile half cylinder, shaft zinc die zinc plated, fixing material m.s. zinc plated, with seal						
	snap on cap IP 40		screw on cap IP 65		hook IP 40	
	with dust cap	non dust cap	with dust cap	non dust cap	with dust cap	non dust cap
for cylinder 40 mm [3] (21)	1125-U191-NA	1125-U190-NA	1125-U191-A	1125-U190-A	1125-U186-A	1125-U185-A
for cylinder 45 mm [3] (26)	1125-U196-NA	1125-U195-NA	1125-U196-A	1125-U195-A	1125-U194-A	1125-U193-A
insert for padlock	(only swinghandle 1125-U190-A)			1125-73	–	–
with cylinder (Berlin version)	–	–	–	–	1125-U276-A	1125-U275-A
for ASSA cylinder	–	–	1125-U198-A	–	–	–
Swinghandle for profile half cylinder zinc die black powder coated, cap polyamide black, with seal						
for cylinder 40 mm [3] (21)	–	–	1125-U191-AQA	on request	–	–
Swing handle for profile half cylinder AISI 316, shaft AISI 303, cap polyamide black, with seal (IP 66)						
for cylinder 40 mm [3] (21)	–	–	1125-U191-APH	on request	–	–

Swinghandle polyamide GF black with insert double bit, zinc die chrome plated, shaft zinc die zinc plated, fixing material m.s. zinc plated, with seal	snap on cap IP 40	screw on cap IP 65
Double bit 3 (Key 1004-05) [1] [2]	1125-U236-NA	1125-U236-A
Double bit 5 (Key 1004-06) [1] [2]	1125-U239-NA	1125-U239-A

Swinghandle polyamide GF black, with round cylinder incl. stainless steel cap and shutter or insert m.s. zinc plated, shaft zinc die chrome plated, fixing material m.s. zinc plated, with seal. Each round cylinder with one key silver steel with black polyamide GF grip					
	snap on cap IP 40		screw on cap IP 65		hook IP 40
	with dust cap	non dust cap	with dust cap	non dust cap	non dust cap
round cylinder keyed EK 333	1125-U206-NA	1125-U202-NA	1125-U206-A	1125-U202-A	1125-U268-A
round cylinder keyed different	1125-U207-NA	1125-U203-NA	1125-U207-A	1125-U203-A	1125-U269-A
Square 6 [1]	1125-U242-NA	1125-U210-NA	1125-U242-A	1125-U210-A	on request
Square 7 [1] [2]	1125-U243-NA	1125-U211-NA	1125-U243-A	1125-U211-A	on request
Square 8 [1] [2]	1125-U244-NA	1125-U212-NA	1125-U244-A	1125-U212-A	on request
Square 8 slotted	1125-U245-NA	1125-U213-NA	1125-U245-A	1125-U213-A	on request
Triangular 6,5 CNOMO	1125-U246-NA	1125-U214-NA	1125-U246-A	1125-U214-A	on request
Triangular 7 [1]	1125-U247-NA	1125-U215-NA	1125-U247-A	1125-U215-A	on request
Triangular 8 [1] [2]	1125-U248-NA	1125-U216-NA	1125-U248-A	1125-U216-A	on request
Triangular 9	1125-U249-NA	1125-U217-NA	1125-U249-A	1125-U217-A	on request
Triangular 10	1125-U250-NA	1125-U218-NA	1125-U250-A	1125-U218-A	on request
Hexagon female 10 SW 10	1125-U251-NA	1125-U219-NA	1125-U251-A	1125-U219-A	on request
Female Square 6	1125-U252-NA	1125-U220-NA	1125-U252-A	1125-U220-A	on request
Female Square 8	1125-U253-NA	1125-U221-NA	1125-U253-A	1125-U221-A	on request
Daimler Benz	1125-U254-NA	1125-U222-NA	1125-U254-A	1125-U222-A	on request
Slot 1,2 x 3	1125-U255-NA	1125-U223-NA	1125-U255-A	1125-U223-A	on request
Slot 2 x 4 [1] [2]	1125-U256-NA	1125-U224-NA	1125-U256-A	1125-U224-A	on request
Crown type	1125-U257-NA	1125-U225-NA	1125-U257-A	1125-U225-A	on request
Eastern Europe Ø 13	1125-U282-NA	1125-U283-NA	1125-U282-A	1125-U283-A	on request

© EMKA Beschlagteile GmbH & Co. KG • 2016 • www.emka.com

EDELSTAHL Rost frei STAINLESS STEEL

Swinghandle for profile half cylinder

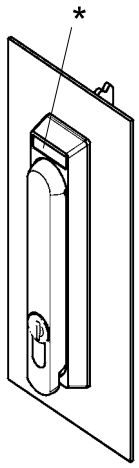

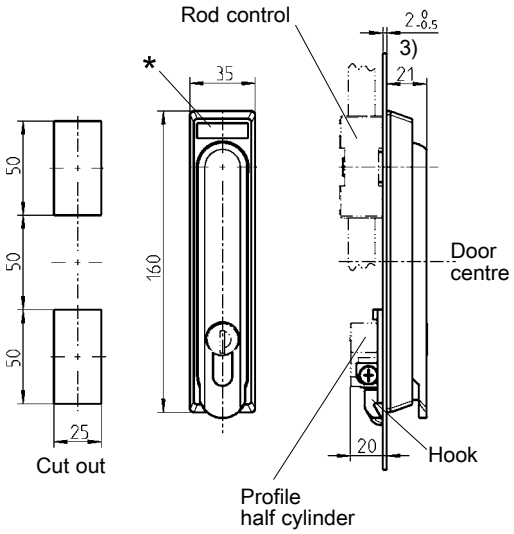

Swinghandle with double bit

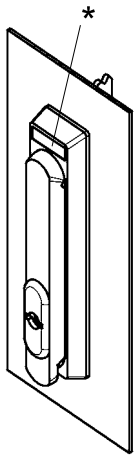

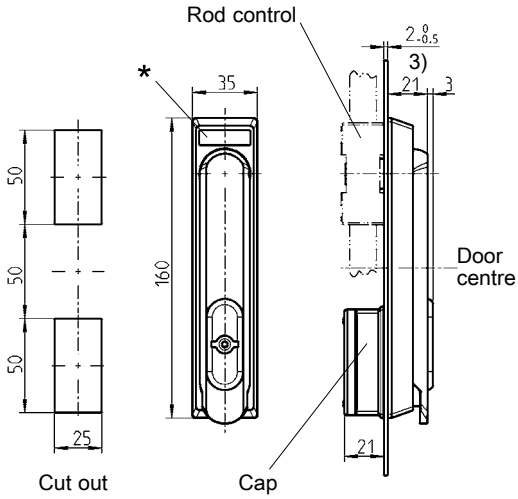

Swinghandle with round cylinder or insert

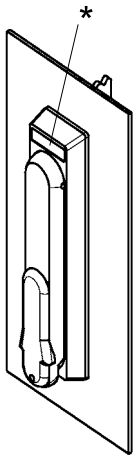

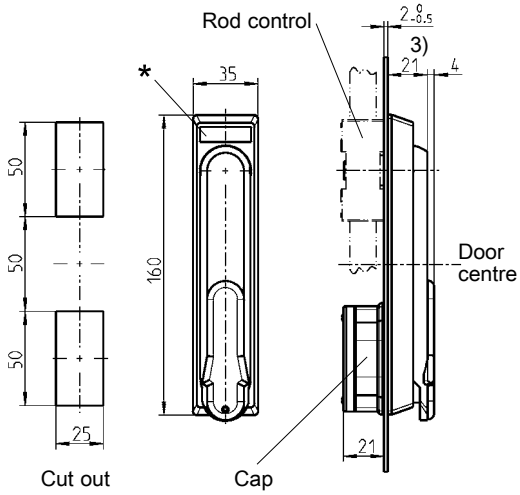

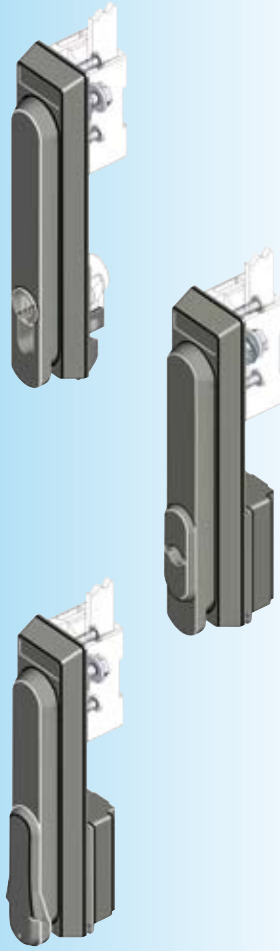

* Logo recess: 27 x 8 x 0,5
Multicolour print possible

Further parts see page

– Key	12B-120
– Rod control	3YA-110
	3YA-120
	3YA-140
(only with hook)	3YA-190
– Bearing bush	3YB-120
– Profile half cylinder	3XB-120

On request insert in

[1] Zinc die black p.c.
[2] polyamide black
– Cap without foamed seal for small bending area on request
– EMC-version

© EMKA Beschlagteile GmbH & Co. KG • 2016 • www.emka.com

Swinghandle

PROGRAM 1125

Double and single profile half cylinder swinghandle

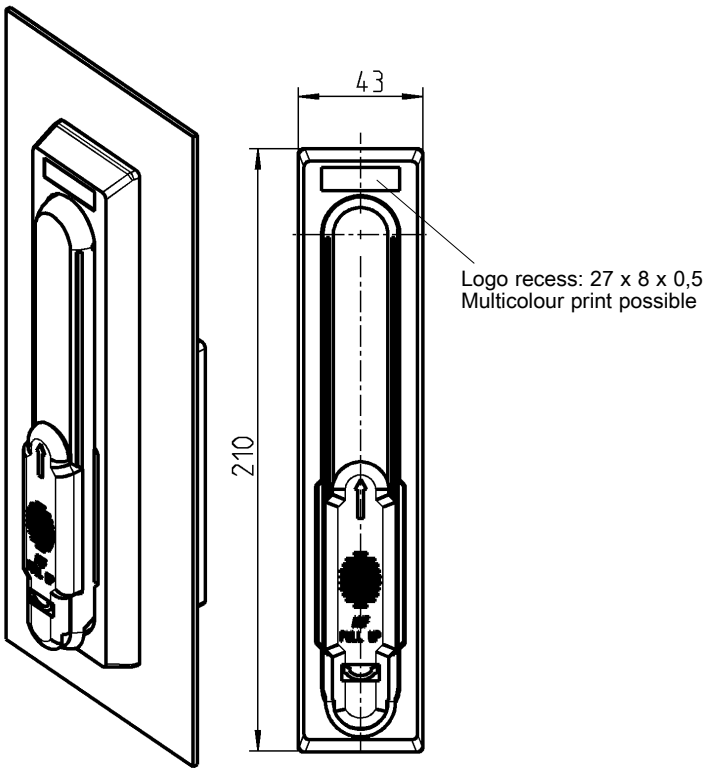

Version A

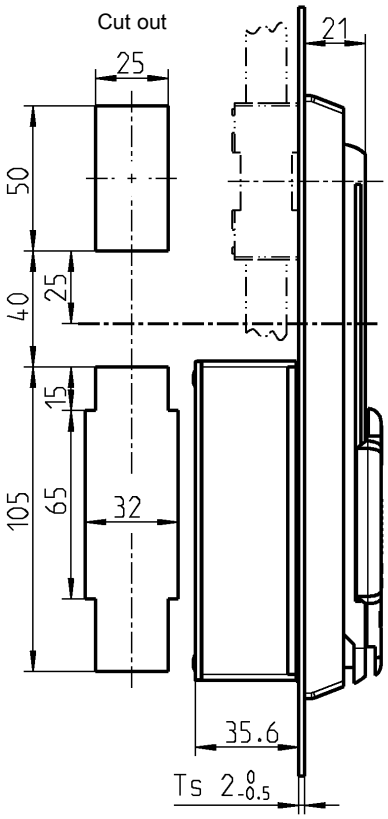

Version B

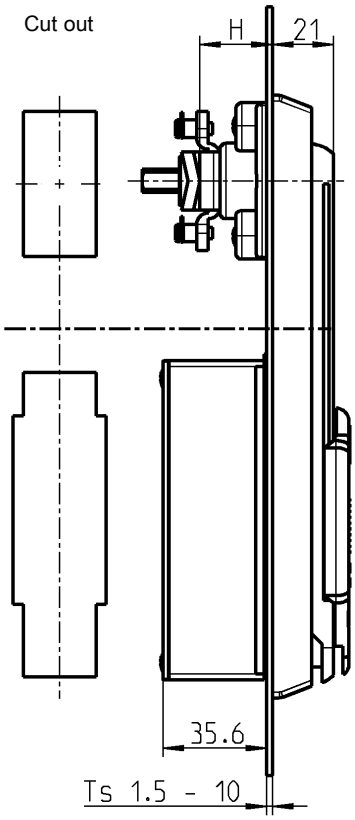

Version C

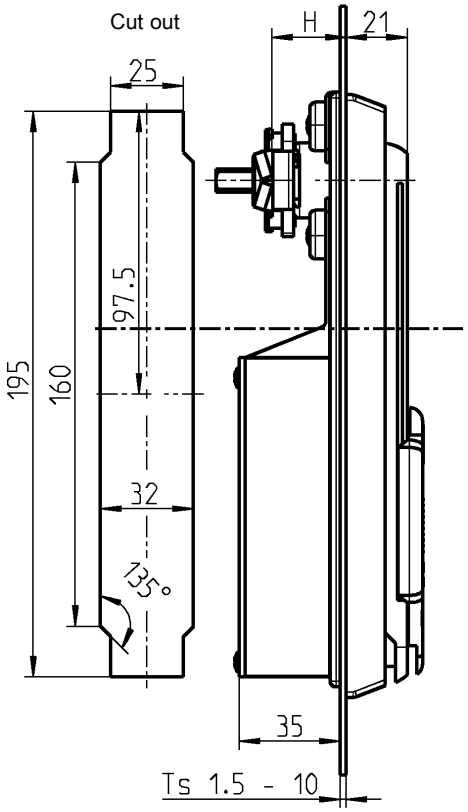

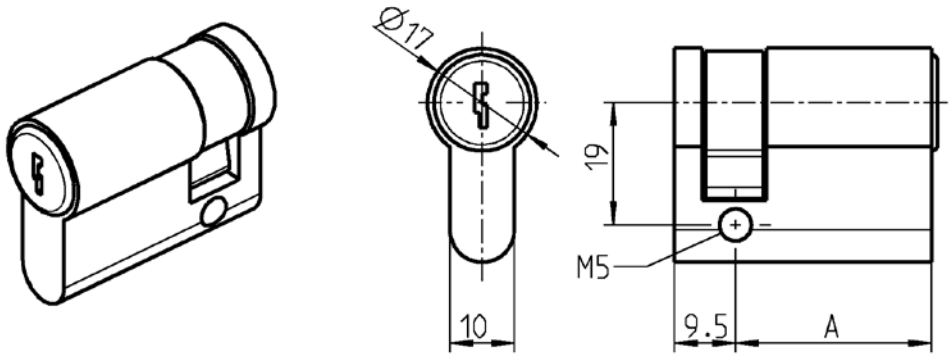

Double and single profile half cylinder swinghandle
suitable for profile half cylinder with A = 30 and 35.

Earthing with version A possible!

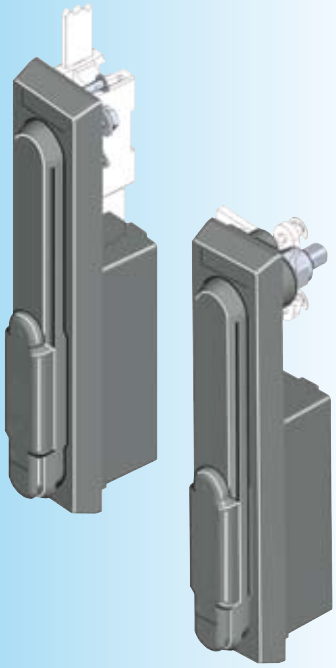

Swinghandle profile half cylinder, polyamide GF black, shaft brass, interlock zinc die, spring zinc plated. fixing material m.s. zinc plated or stainless steel, with seal	
Version A for rod control	
Double cylinder-swinghandle with one-key operation Key always removable	1125-U51-A
Single cylinder-swinghandle Key always removable	1125-U55-A
Double cylinder-swinghandle with one-key operation Key removable when the handle is put in	1125-U53-A
Version B with bearing bush	
Double cylinder-swinghandle with one-key operation Key always removable	1125-U57-A
Single cylinder-swinghandle Key always removable	1125-U58-A
Double cylinder-swinghandle with one-key operation Key removable when the handle is put in	1125-U56-A
Double cylinder-swinghandle with 2-key operation Key removable when the handle is put in	1125-U289
Version C with bearing bush	
Double cylinder-swinghandle with one-key operation Key always removable	1125-U60-A
Single cylinder-swinghandle Key always removable	1125-U61-A
Double cylinder-swinghandle with one-key operation Key removable when the handle is put in	1125-U59-A

One-key operation
Handle can be opened when one cylinder is unlocked.
Removal of key on choice

2-key operation
The handle can only be opened when both cylinders are unlocked.
Removal of key on choice
The 2-key operation is a RH version.
For profile half cylinder A = 30.

Further parts see page
- Rod control for Version A — 3YA-220, 3YA-240
- Cam for Version B — 3YC-120
- Rod control vor cam for version B — 3YC-180
- Cam for Version C (H = 25 + Ts = 2) — 3YC-140
- Profile half cylinder — 3XB-220

© EMKA Beschlagteile GmbH & Co. KG • 2016 • www.emka.com

EMKA®
Beschlagteile

Swinghandle
PROGRAM 1125

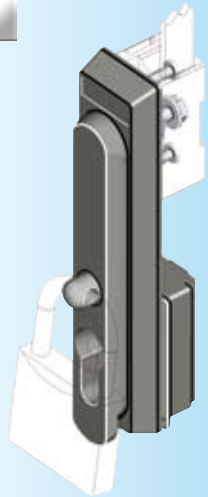

Further parts see page

– Bearing bush	3YB-120
– Rod control	3YA-110
	3YA-120
	3YA-140
– Profile half cylinder	3XB-120

* Logo recess: 27 x 8 x 0.5
Multicolour pad print possible

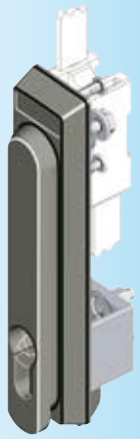

Note:
CNOMO swinghandle can only be used outside the gasketing!

Further parts see page

– Rod control	3YA-110
	3YA-120
– Profile half cylinder	3XB-120

Swinghandle for padlock

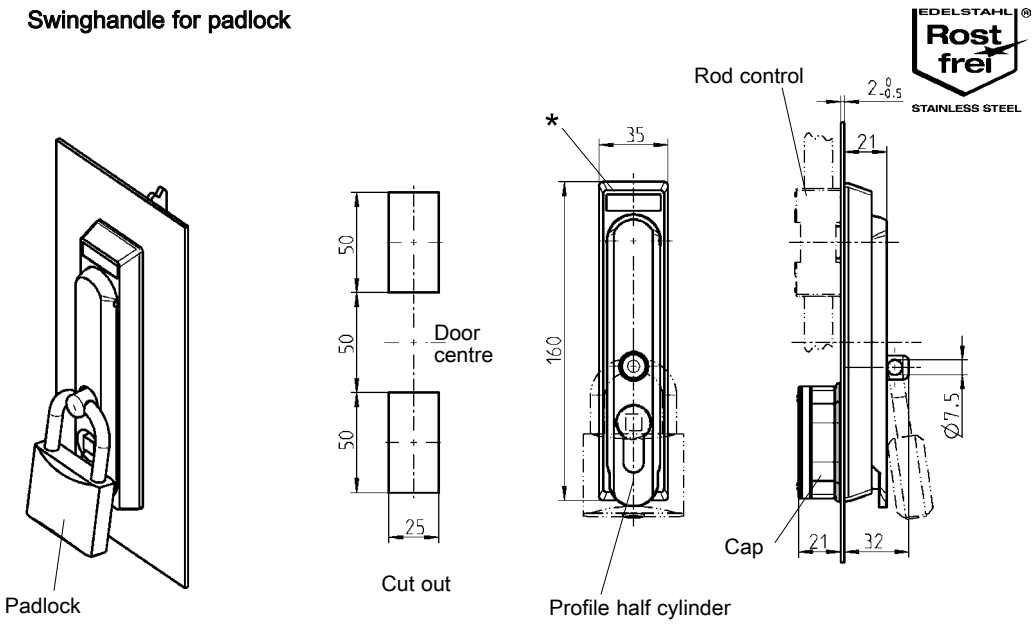

Swing handle for 40 mm profile half cylinder polyamide GF black; shaft zinc die zinc plated; padlock shackle AISI 303; fixing material m.s. zinc die; with seal	
	1125-U184-A
Swing handle for 40 mm profile half cylinder AISI 316; shaft and padlock shackle AISI 303; cap polyamide black, with seal	
	1125-U184-APH
Ford-Version realised by	
profile half cylinder (square 7 mm)	1109-U5-N

Swinghandle for CNOMO

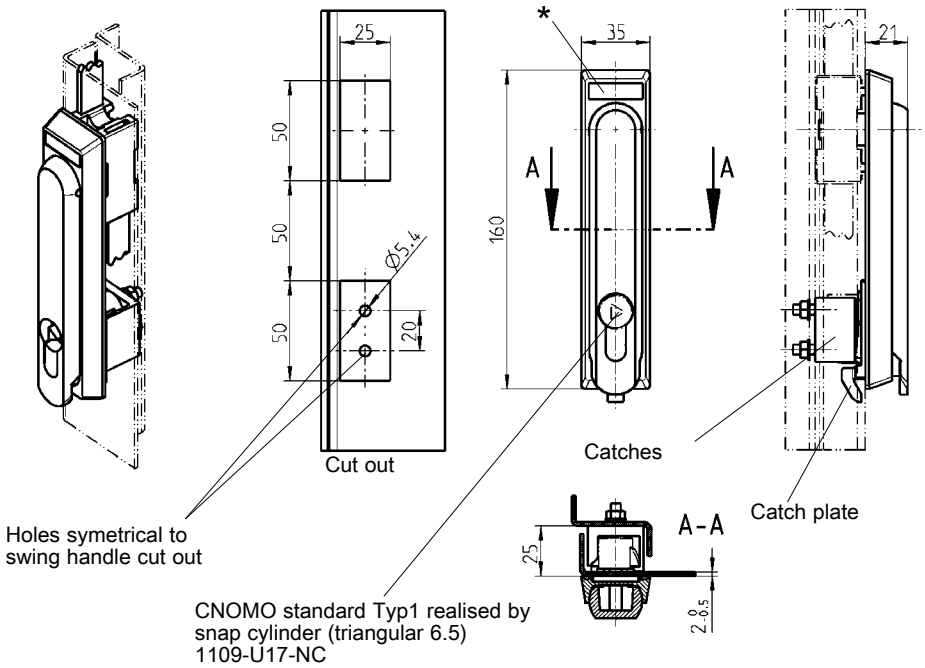

Handle is spring loaded and can only be locked if the door is completely closed.

Swing handle for 40 mm profile half cylinder polyamide GF black; catch and shaft zinc die zinc plated; fixing m.s. zinc plated	
without dust cap	1125-U200-A
with dust cap	1125-U201-A

© EMKA Beschlagteile GmbH & Co. KG • 2016 • www.emka.com

Swing handle and escutcheon
Program 1325

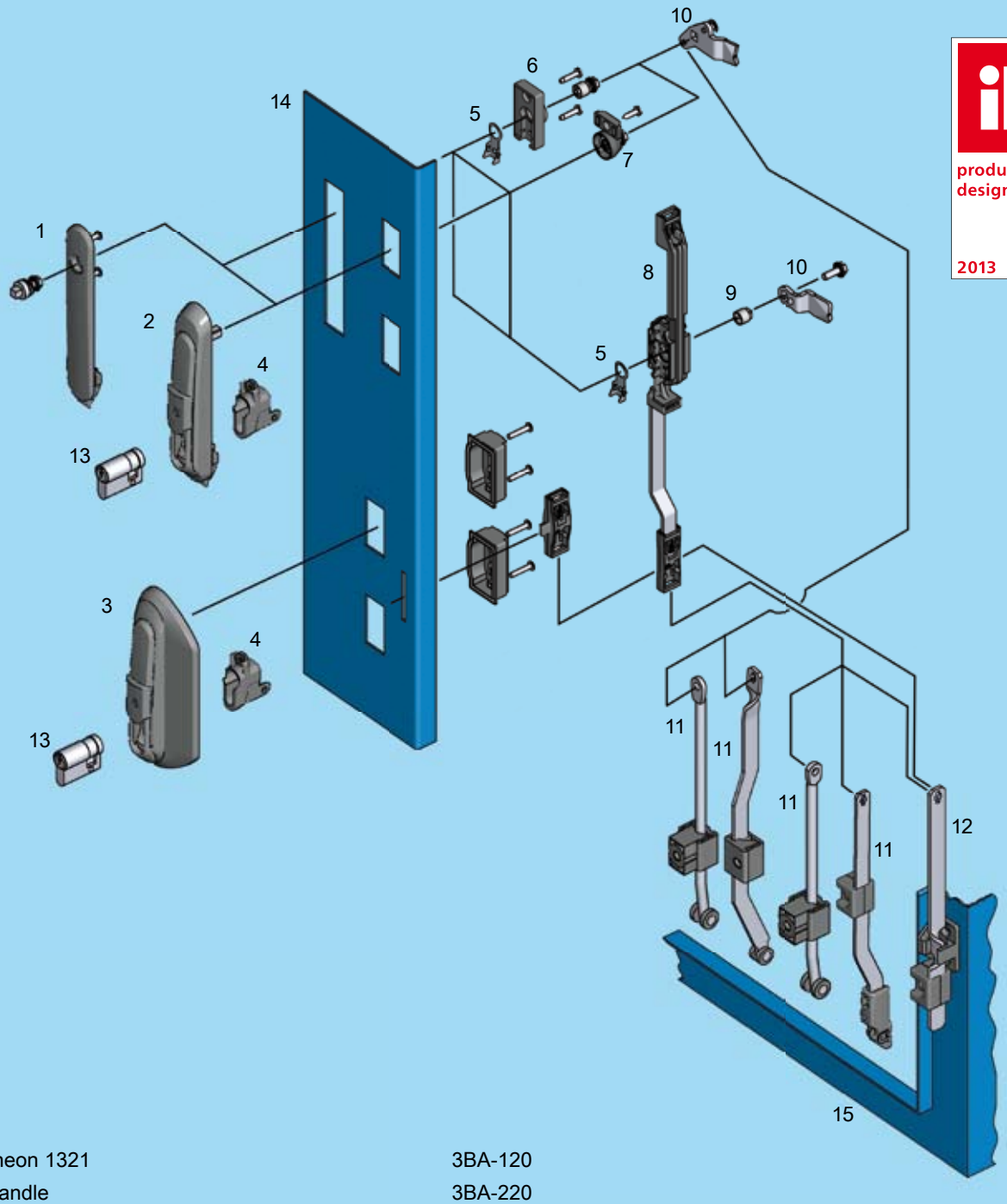

product design award 2013

1	Escutcheon 1321	3BA-120
2	Swinghandle	3BA-220
3	Swing handle for narrow door return	3BA-320
4	Locking set	
5	Earthing device	
6	Bearing bush for escutcheon	
7	Adapter for swing handle	
8	Rod control	
9	adapter	
10	Cam	
11	Rod (inside the gasketing)	
12	Rod (outside the gasketing)	
13	Locking options, e.g. profile half cylinder	
14	Door	
15	Cabinet/frame	

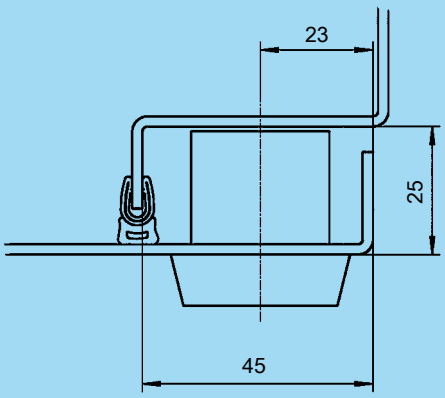

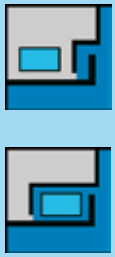

3BA-100

EMKA®

Beschlagteile

Notes:

Escutcheon 1321

PROGRAM 1325

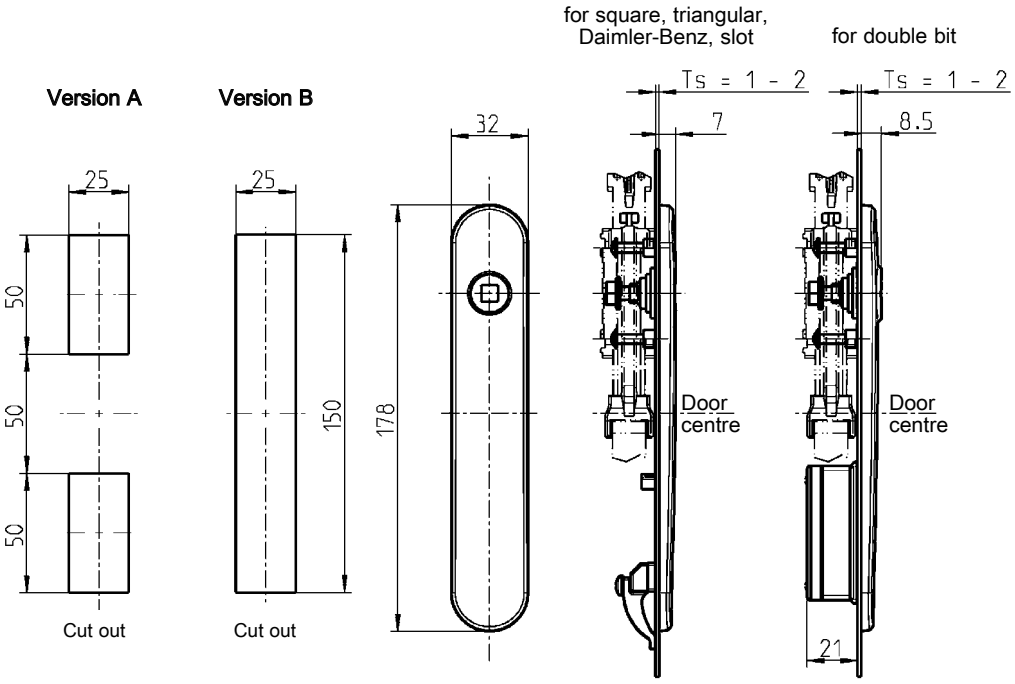

Examples of combinations

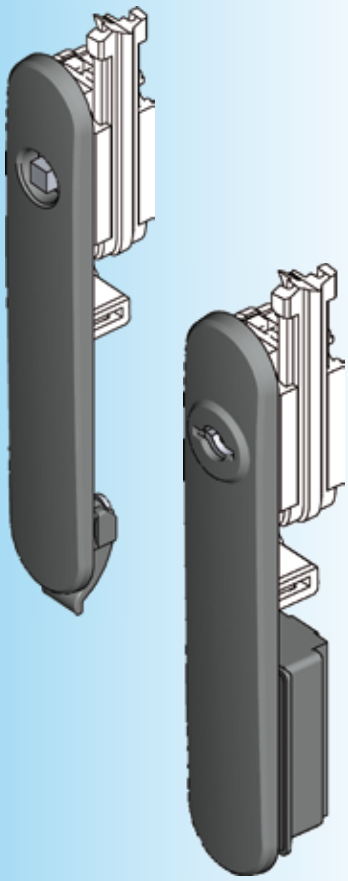

Escutcheon polyamide GF black; hook or cap polyamide GF black; zinc plated screws		
	Hook; IP 40	Cap; IP 65 with cut out version A
for square, triangular, Daimler-Benz, slot	1321-U1	1321-U3
for double bit	1321-U2	1321-U4
for railroad square 9	on request	on request
for FIAT	on request	on request
Insert zinc die chrome plated; fixing material m.s. zinc plated		
Square 6		1121-U11
Square 7		1121-U12
Square 8		1121-U13
Triangular 6.5 CNOMO		1121-U169
Triangular 7		1121-U14
Triangular 8		1121-U15
Double bit 3**		1121-U16
Double bit 5**		1121-U17
Square female 8		1121-U167
Daimler Benz		1121-U18
Slot 2 x 4		1121-U123
FIAT		1121-U24
Railroad square 9		1121-U72

Multicolour print possible

Further parts see page

– Key	12B-120
– Rod control	3YA-110
	3YA-120
	3YA-140
(only with hook and with cut out version A)	3YA-190
– Bearing bush	3YB-120

Accessories

Transport safety device polyamide GF black for double bit insert

1121-32

© EMKA Beschlagteile GmbH & Co. KG • 2016 • www.emka.com

Swinghandle with variable use of locking

PROGRAM 1325

Version A

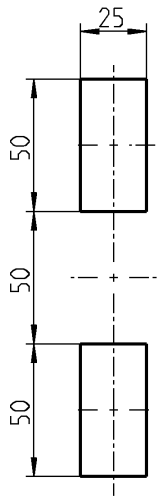

Cut out

Version B

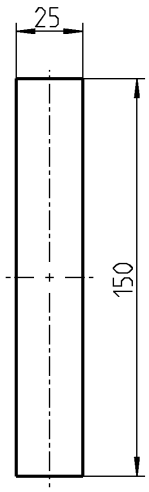

Cut out

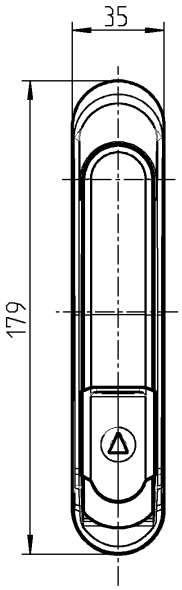

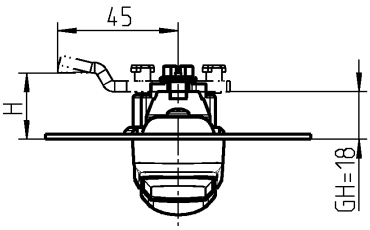

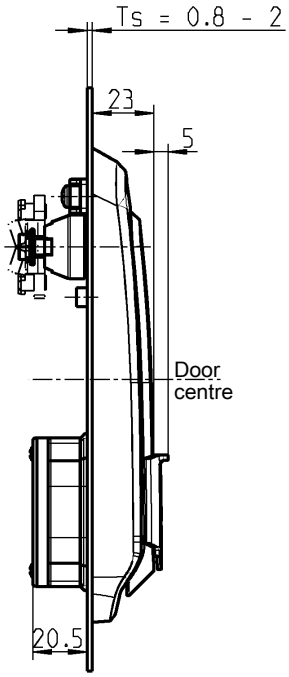

Swing handle with cap adapter for cam

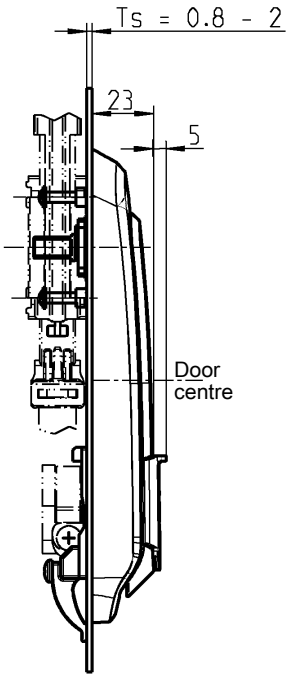

Swing handle with hook for rod control

Examples of combinations

Adapter for cam 1325-U101, order separately

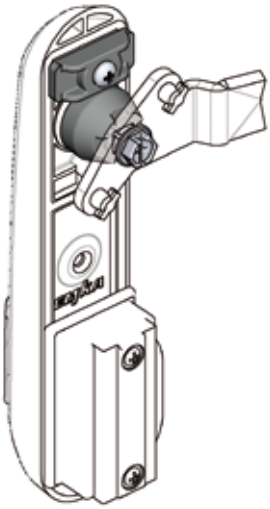

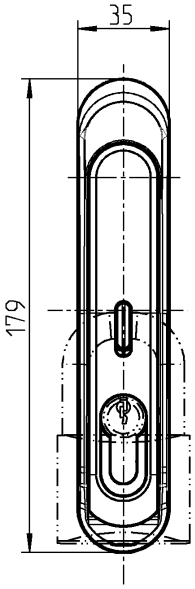

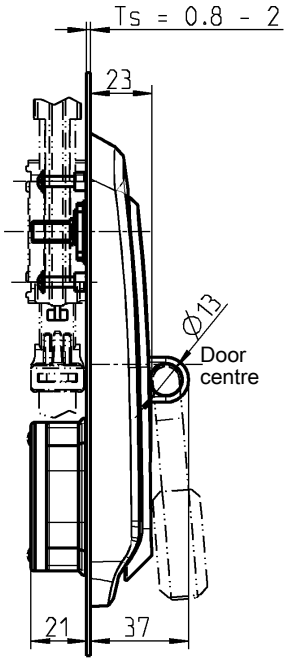

Swing handle with cap and for padlock and for rod control

© EMKA Beschlagteile GmbH & Co. KG • 2016 • www.emka.com

product design award 2013

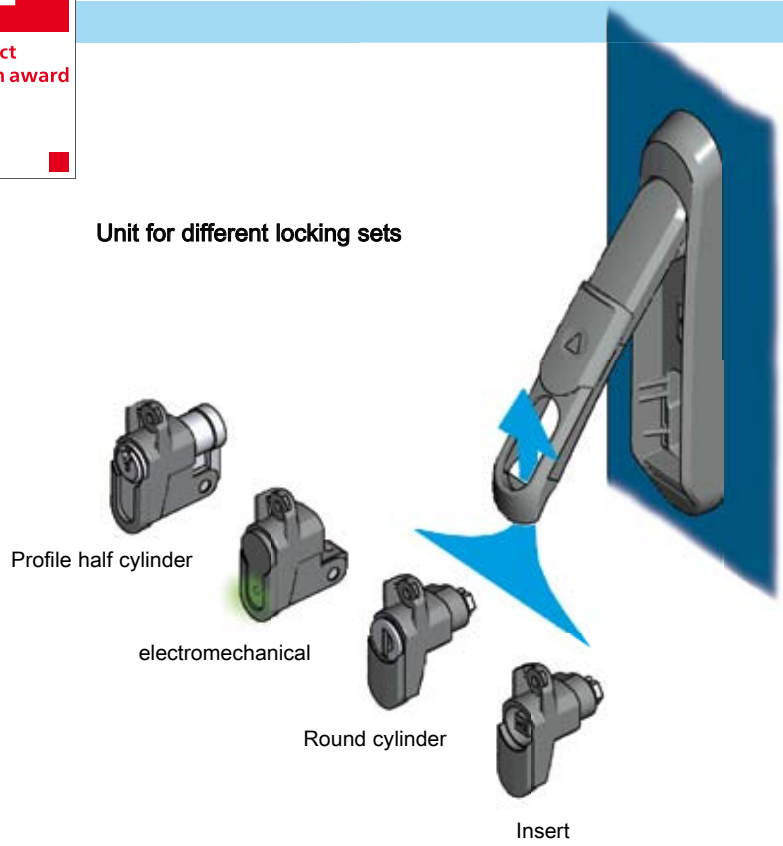

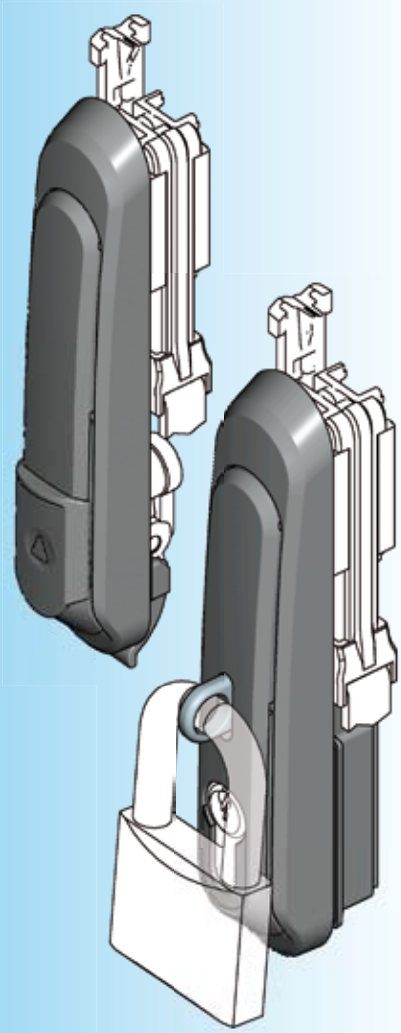

Product benefits

- flat housing (23 mm + 5 mm dust protection slider)
- IP 65 when fixed with cap, IP 40 when fixed with hook
- for standard cutout
- pre-assembled swinghandle and escutcheon
- locking systems can be exchanged easily
- spring-mounted handle
- Plastic parts protruding into the cabinet are of low flammability (PA 6 GF 30 V0)
- patented

Swing handle for rod control handle and dish polyamide GF black; cylinder cover polyamide GF black (not for swing handle for padlock); shaft zinc die zinc plated; circlip m.s. zinc plated; hook or cap polyamide GF black; padlock device AISI 316; fixing material m.s. zinc plated; with spring and seal		
(1) (please order locking set separately) (2) (with cut out version A) (3) (In case of profile half cylinder the locking cam has to be at 90°)	without locking set(1)	with locking set for profile half cylinder 40 mm (A = 30 mm) (3)
Swing handle with hook; IP 40	1325-U1	1325-U1-01
Swing handle with cap; IP 65 (2)	1325-U2	1325-U2-01
Swing handle with hook and for padlock; IP 40	1325-U3	1325-U3-01
Swing handle with cap and for padlock; IP 65 (2)	1325-U4	1325-U4-01
Adapter for cam PBT GF V0 black; bridge bar polyamide GF V0 black; fixing material m.s. zinc plated		
		1325-U101

Multicolour print possible

Swing handle without cylinder cover on request

Further parts see page
- Profile half cylinder 3XB-120 (Blind plug without spring loaded ball not usable)
- Locking set 3XC-120
- Cams (for adapter) 3YC-120
- Rod control 3YA-110, 3YA-120, 3YA-140 (only with hook and cut out version A) 3YA-190
- Cam for rod control (3-point latch system) 3YA-840

© EMKA Beschlagteile GmbH & Co. KG • 2016 • www.emka.com

Swing handle with variable use of locking sets

PROGRAM 1325

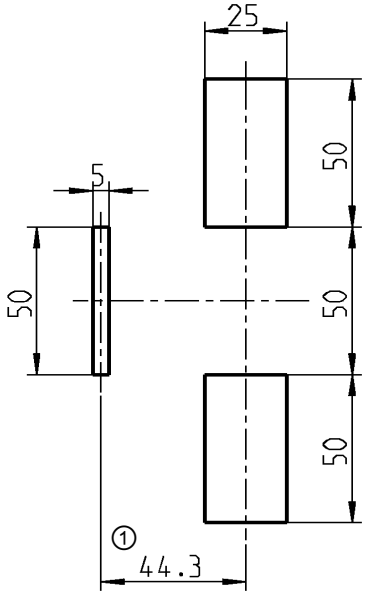

Cut out

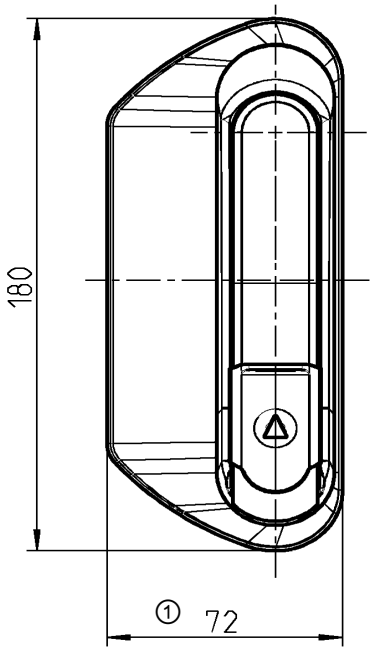

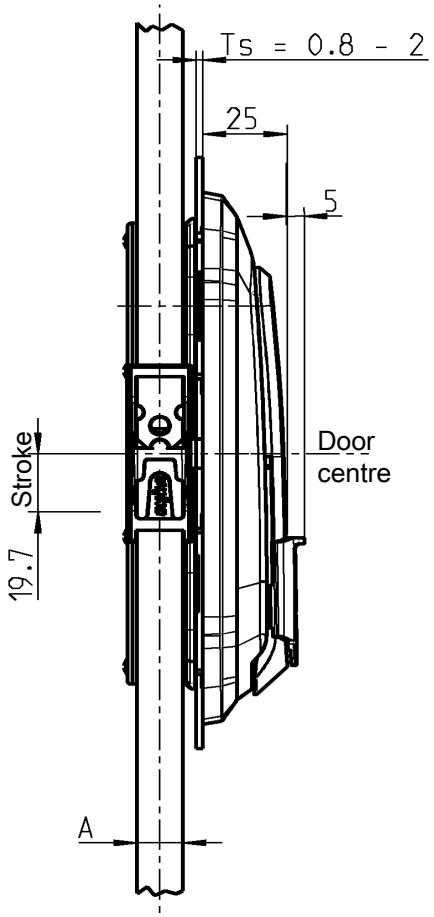

Stroke of rod one direction

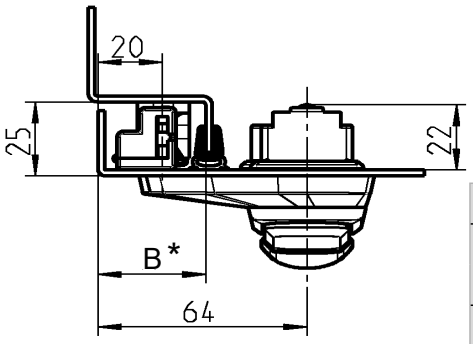

Example of an installation

Product benefits

- innovative award-winning design
- ergonomic surface feel
- variable locking options
- quick assembly and simple right-left change
- integrated scratch protection prevents surface damage (handle / dish)
- rattle-free rod connection by patented clip-in connection
- make small clearance possible 33 x 25 mm or 37 x 25 mm

Dimension A	Flat rod 14x3	
Locking type (see right)	Dimension B	
	without seal	with seal*
1	30	33
2	30	33
3	34	37

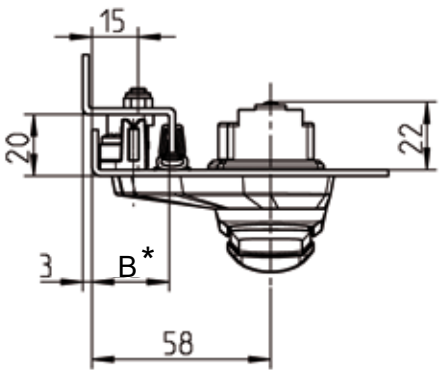

Dimension A	Flat rod 10x3	
Locking type (see right)	Dimension B	
	without seal	with seal*
4	22	25

* The values in the table for dimension B with seal refer to the seal 1011-10. Other seals result in different values for dimension B.

© EMKA Beschlagteile GmbH & Co. KG • 2016 • www.emka.com

product design award 2013

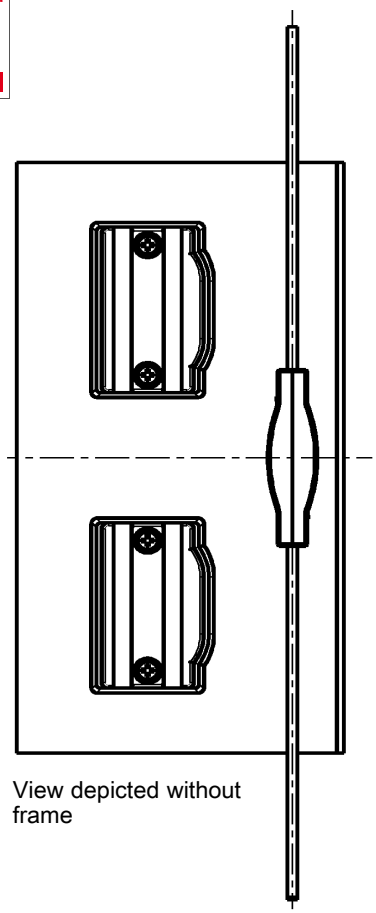

View depicted without frame

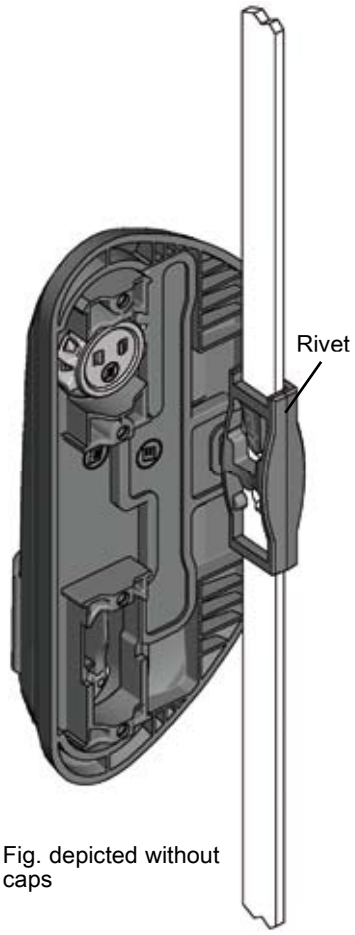

Fig. depicted without caps

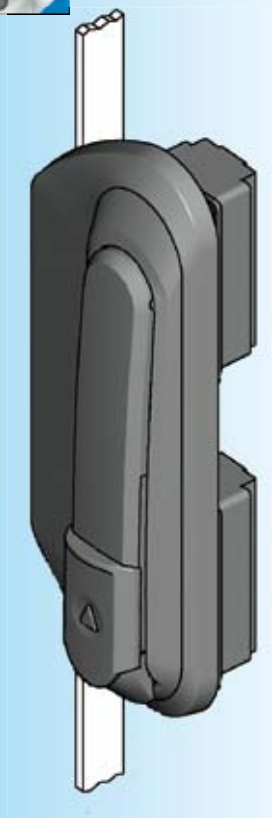

Locking types

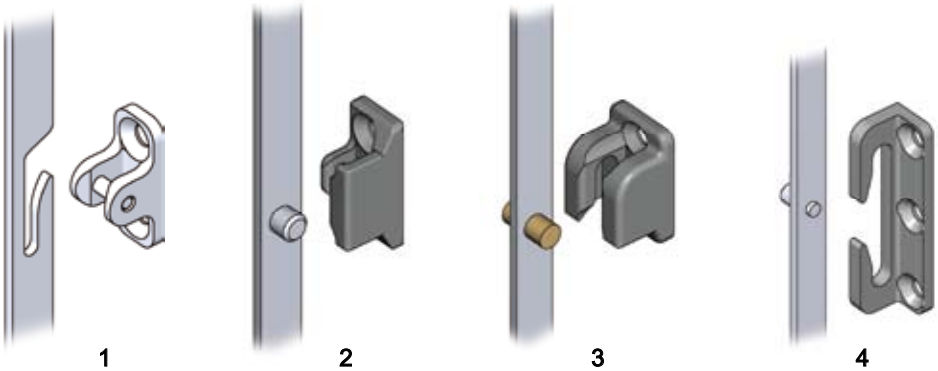

1	2	3	4
rod with cut out	rod with single roll	rod with double roll	rod with single roll

Locking set for different locks (see catalogue page 3BA-220)

① = Articles in other dimensions on request

Catch and hinge have the same fixing points

Multicolour print possible

Further parts see page

– Locking set	3XC-120
– Rod controls Chamfering 25	3ZA-600
– Chamfering 20	3ZA-605

Hinge suitable for the locking types 1, 2 and 3

– 125° hinge	4A-136
– 180° hinge (bottom)	4A-140
– 180° hinge	4A-145

also suitable for locking type 3

– 180° hinge (26 mm door return)	4A-170
– 180° hinge (26 mm door return)	4A-210

Swinghandle, catch and caps polyamide GF black; rack polyamide 66 GF 50 black; shaft with pinion zinc die zinc-plated; fixing material m. s. zinc-plated; with spring and seal without lock set (please order lock set separately)

for flat rod 14x3; chamfering 25	1325-U201
for flat rod 10x3; chamfering 20	1325-U202

© EMKA Beschlagteile GmbH & Co. KG • 2016 • www.emka.com

Swinghandle 1150

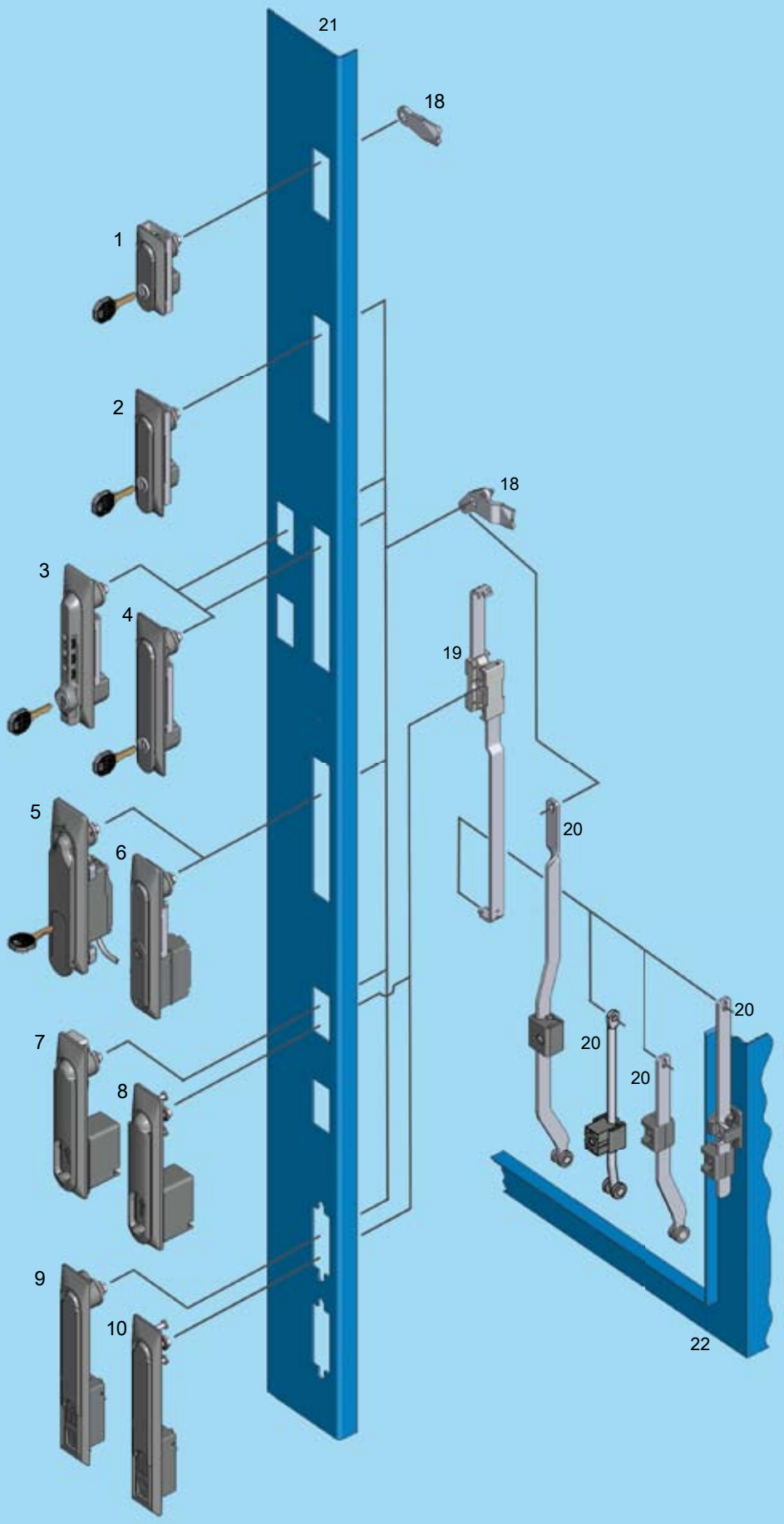

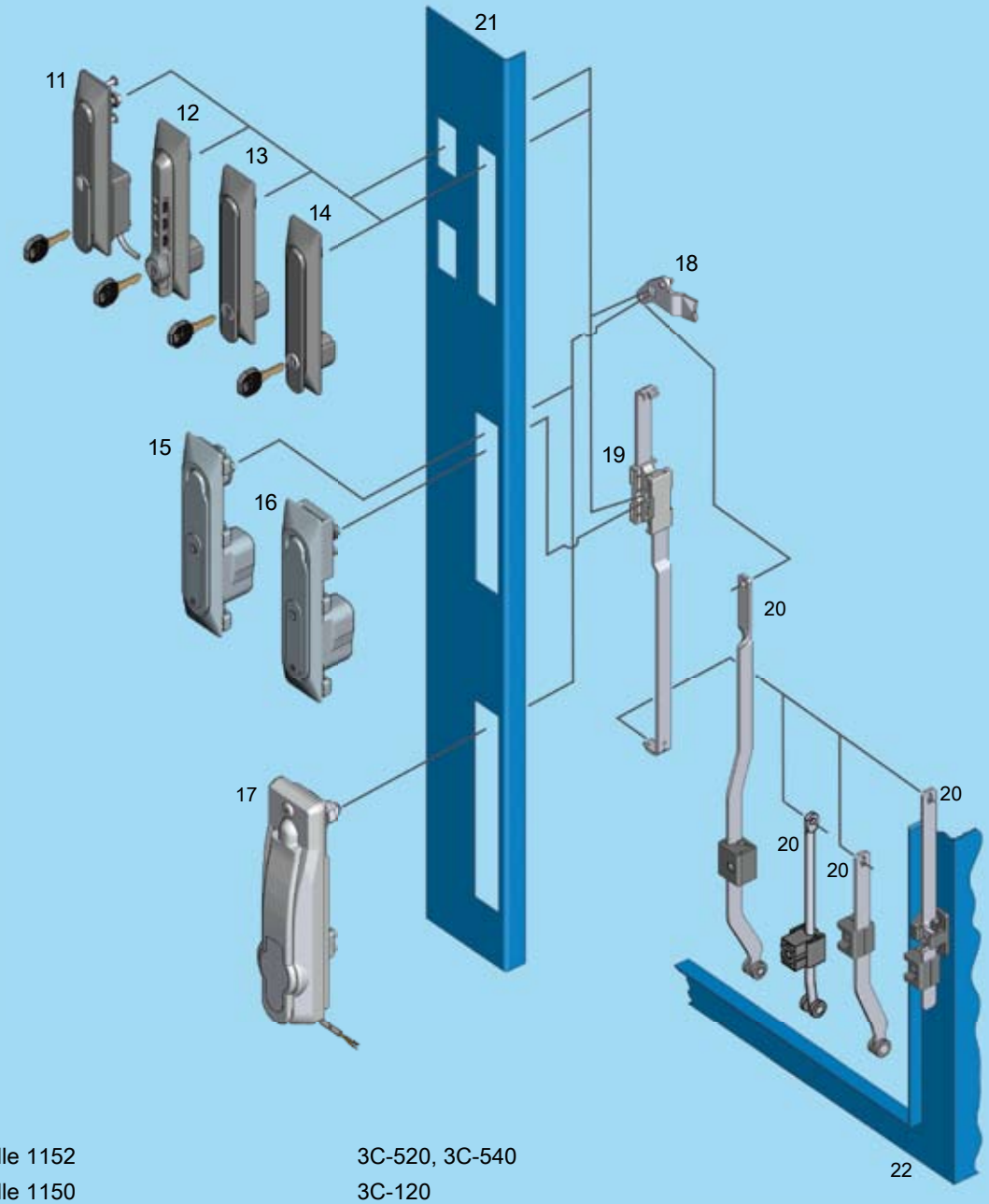

1	Swinghandle 1152	3C-520, 3C-540
2	Swinghandle 1150	3C-120
3	Swinghandle 1155	3C-620
4	Swinghandle 1150	3C-120, 3C-140
5	Swinghandle 1154 electromechanically	3C-240
6	Swinghandle 1154	3C-220
7	Swinghandle 1153 for cam	3C-320
8	Swinghandle 1153 for rod control	3C-320
9	Swinghandle 1151 for cam	3C-420
10	Swinghandle 1151 for rod control	3C-440
11	Swinghandle 1150 electromechanical	3C-160
12	Swinghandle 1155 with universal escutcheon	3C-750
13	Swinghandle 1150 with universal escutcheon and “Push to Lock”-action	3C-740
14	Swinghandle 1150 with universal escutcheon	3C-720 up to 3C-740
15	Swinghandle 1154 with WK2 for cam	3C-260
16	Swinghandle 1154 with WK2 for rod control	3C-260
17	Swinghandle 1154 electromechanical with WK2	3C-280
18	Cam	
19	Rod control	
20	Rods	
21	Door	
22	Cabinet/frame	

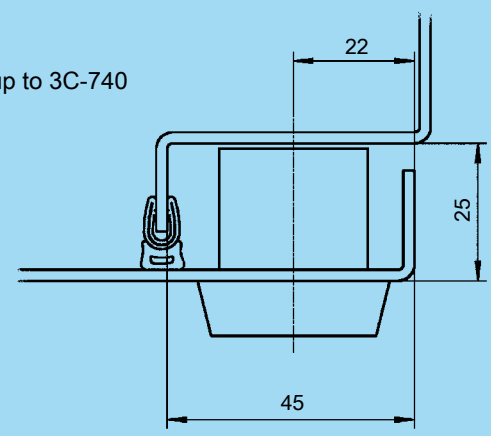

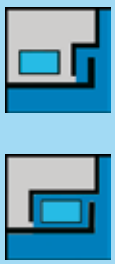

3C-100

Swinghandle 1150

PROGRAM 1150

Version A (small)

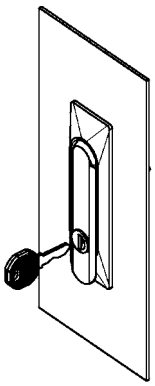

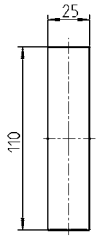

Cut out

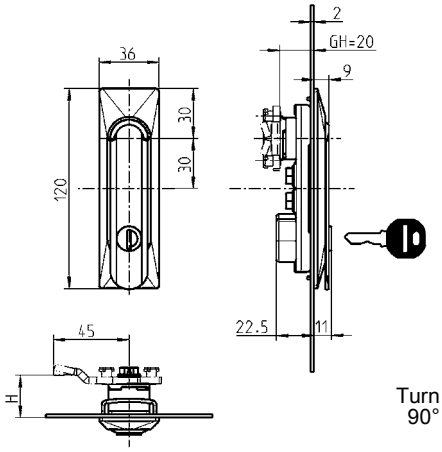

Turn = Stroke
90° = 26 mm

Version B (normal)

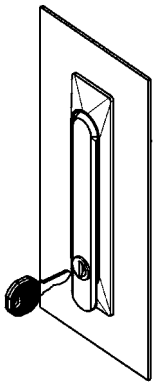

Cut out

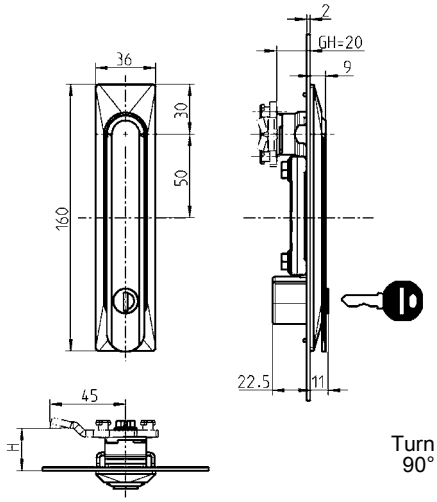

Turn = Stroke
90° = 26 mm

* EMC-Version 1150-U2-E

	Swinghandle zinc die black powder coated, round cylinder with stainless steel cap and shutter, fixing material m.s. zinc plated, shaft zinc die zinc plated, with seal, swinghandle is earthed		Swinghandle polyamide GF black, round cylinder with stainless steel cap and shutter, fixing material m.s. zinc plated, shaft zind die zinc plated, with seal		Swing handle zinc die black powder coated and dish polyamide GF black, round cylinder with stainless steel cap and dust cap, fixing material m.s. zinc plated, shaft zinc die zinc plated, with seal	
Version	**A**	**B**	**A**	**B**	**A**	**B**
keyed EK 333	1150-U1	1150-U2*	1150-U1-02	1150-U2-02	1150-U1-03	1150-U2-03
keyed different	1150-U3	1150-U4	1150-U3-02	1150-U4-02	1150-U3-03	1150-U4-03
Insert zinc die chrome pl.						
Square 6	1150-U20	1150-U9	1150-U20-02	1150-U9-02	1150-U20-03	1150-U9-03
Square 7	1150-U21	1150-U10	1150-U21-02	1150-U10-02	1150-U21-03	1150-U10-03
Square 8	1150-U22	1150-U11	1150-U22-02	1150-U11-02	1150-U22-03	1150-U11-03
Triangular 6,5 CNOMO	1150-U32	1150-U31	1150-U32-02	1150-U31-02	1150-U32-03	1150-U31-03
Triangular 7	1150-U23	1150-U12	1150-U23-02	1150-U12-02	1150-U23-03	1150-U12-03
Triangular 8	1150-U24	1150-U13	1150-U24-02	1150-U13-02	1150-U24-03	1150-U13-03
Double bit 3	1150-U25	1150-U14	1150-U25-02	1150-U14-02	1150-U25-03	1150-U14-03
Double bit 5	1150-U26	1150-U15	1150-U26-02	1150-U15-02	1150-U26-03	1150-U15-03
Daimler Benz	1150-U27	1150-U16	1150-U27-02	1150-U16-02	1150-U27-03	1150-U16-03
Slot 2x4	1150-U28	1150-U17	1150-U28-02	1150-U17-02	1150-U28-03	1150-U17-03
Hexagon 8 mm female with pin	1150-U29	1150-U18	1150-U29-02	1150-U18-02	1150-U29-03	1150-U18-03
Male hexagon 11 mm	1150-U30	1150-U19	1150-U30-02	1150-U19-02	1150-U30-03	1150-U19-03
Push button	on request	on request	on request	on request	1150-U55-03	on request

© EMKA Beschlagteile GmbH & Co. KG • 2016 • www.emka.com

Version B
for padlock

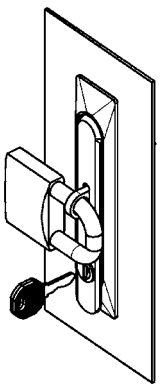

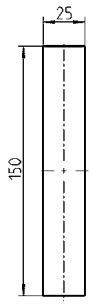

Cut out

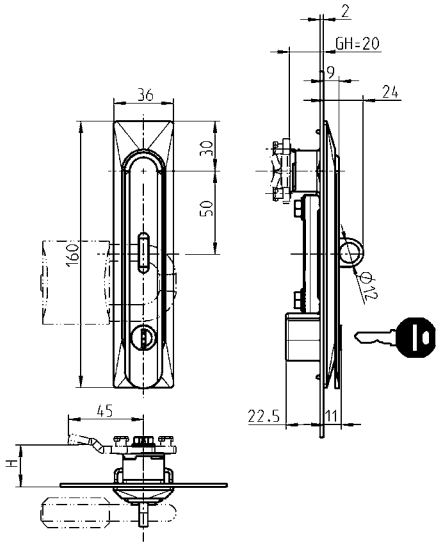

Each round cylinder has one silver steel key with polyamide grip GF black.

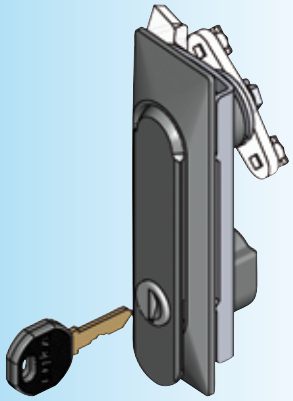

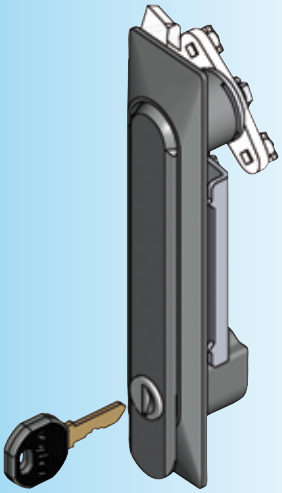

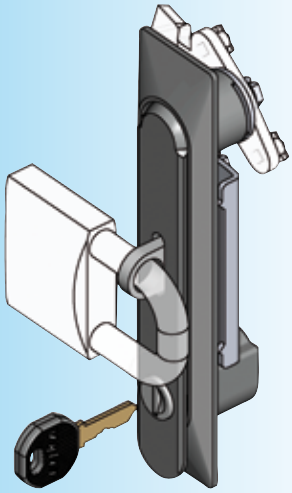

Swing handle zinc die black powder coated, round cylinder with stainless steel cap and dust cap, padlock shackle AISI 316, shaft zinc die zinc plated, with seal, fixing material m.s. zinc plated, swing handle earthed	
Version B for padlock	
keyed EK 333	1150-U2-01
keyed different	1150-U4-01
Insert zinc die chrome pl.	
Square 6	1150-U9-01
Square 7	1150-U10-01
Square 8	1150-U11-01
Triangular 6,5 CNOMO	1150-U31-01
Triangular 7	1150-U12-01
Triangular 8	1150-U13-01
Double bit 3	1150-U14-01
Double bit 5	1150-U15-01
Daimler Benz	1150-U16-01
Slot 2x4	1150-U17-01
Hexagon 8 female with pin	1150-U18-01
Hexagon 11 male	1150-U19-01
Push button	on request

Further parts see page
- Key 12B-120
- Spare key 12B-140
- Cam (GH = 20) 3YC-140

On request:
- handle blank (no locking system)

© EMKA Beschlagteile GmbH & Co. KG • 2016 • www.emka.com

EMKA®

Beschlagteile

Swinghandle* 1150

PROGRAM 1150

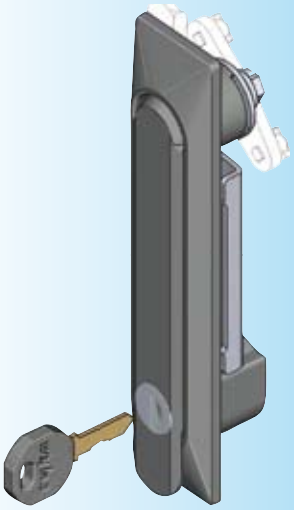

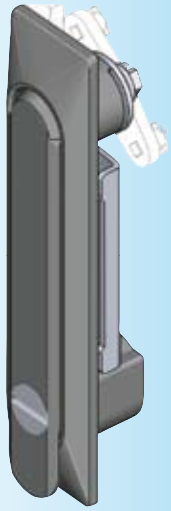

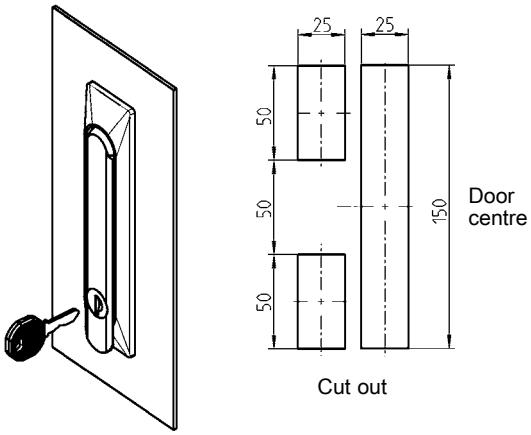

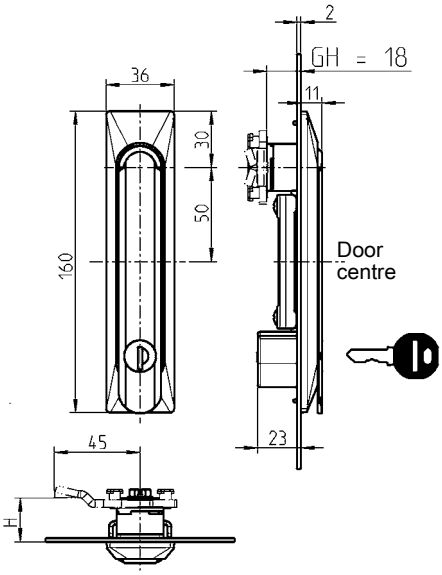

Swinghandle zinc die black powder coated, escutcheon polyamide black, fixing material m.s. zinc plated, shaft zinc die zinc plated, round cylinder with stainless steel cap and shutter, with seal Each round cylinder has one silver steel key with polyamide grip GF black.	
keyed EK 333	1150-U33-03
keyed different	1150-U34-03
Inserts: Chrome plated zinc alloy	
Square 6	1150-U36-03
Square 7	1150-U37-03
Square 8	1150-U38-03
Triangular 6,5 CNOMO	1150-U39-03
Triangular 7	1150-U40-03
Triangular 8	1150-U41-03
Double bit 3	1150-U42-03
Double bit 5	1150-U43-03
Daimler Benz	1150-U44-03
Slot 2x4	1150-U35-03
Hexagon female 8 with pin	1150-U45-03
Hexagon 11 male	1150-U46-03

* can be assembled in cut out of 1125/1225

Further parts see page
- Key 12B-120
- Spare key 12B-140
- Cam (GH = 18) 3YC-120

On request:
- Key retained in the open position of the cylinder
- Other inserts

© EMKA Beschlagteile GmbH & Co. KG • 2016 • www.emka.com

Swinghandle 1150 with electromechanical release and emergency opening

PROGRAM 1150

This handle is suitable for locking of indoor cabinets. It is released by applying a voltage signal of 12 V or 24 V DC. After the handle has been pressed briefly into the dish, it can be opened. The integrated reed contact indicates the handle status. To lock the handle it must be pressed into the dish until the closing mechanism engages. The key provided is used to open the handle in case of power failure. For this the cover over the locking cylinder must be removed. The cover will be destroyed thereby and must be replaced.

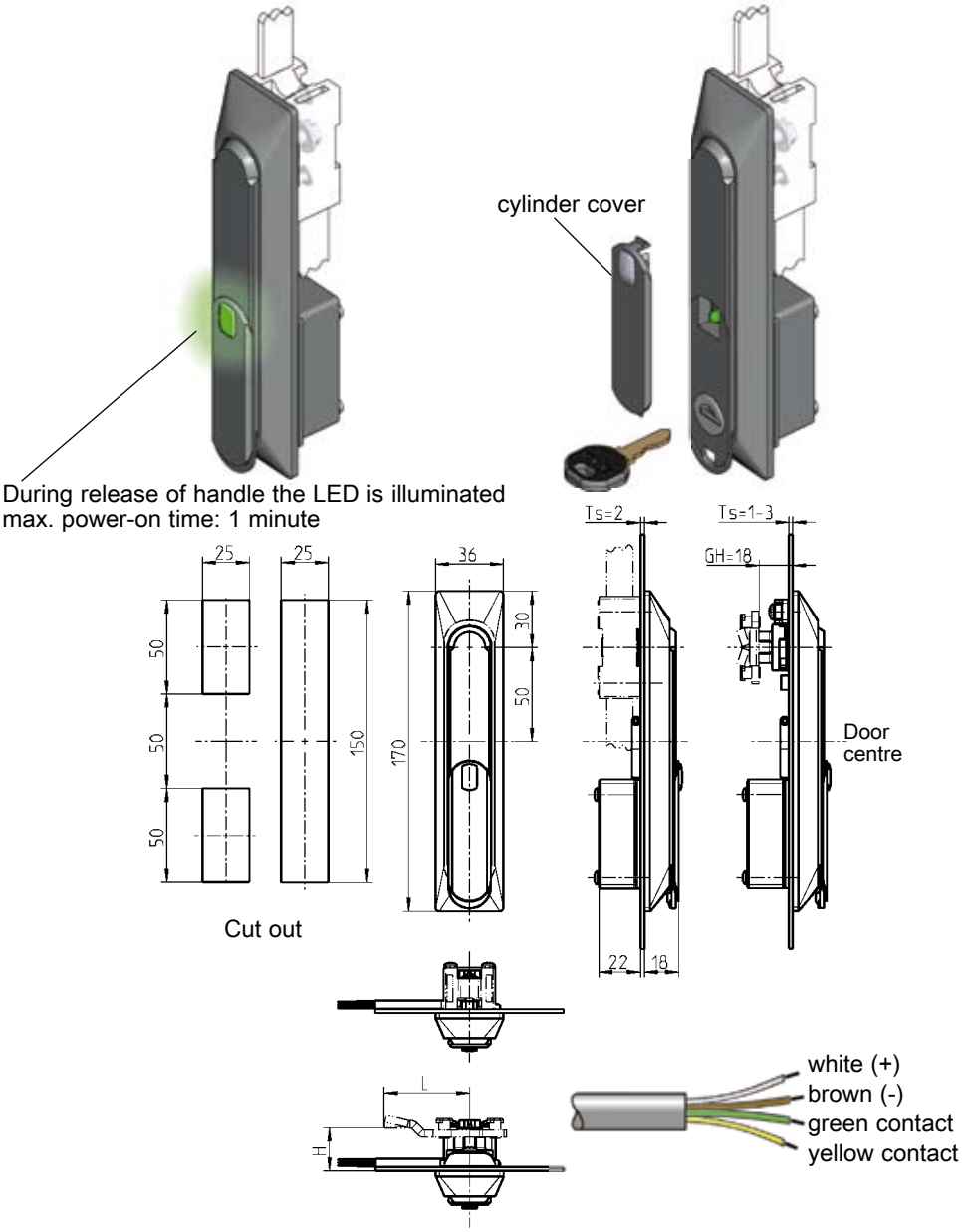

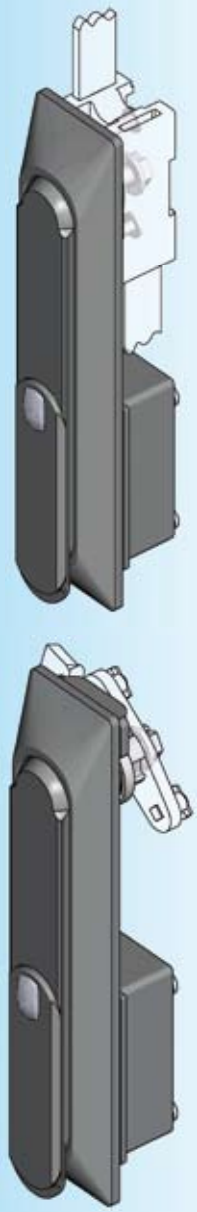

Handle zinc die black powder coated; dish and cap polyamide GF black;cylinder cover Bio-Flex black;shaft AISI 303,
round cylinder with stainless steel cap and dust cap; soleoid with electronics;reed switch and LED;connecting cable(4 m;fixing material m.s. zinc plated.
Each round cylinder has one silver steel key with polyamide grip GF black.
Switching power contact: 48 VDC, 0.5 A

	keyed EK 333	keyed different
Solenoid 12 V, for rod control	1150-U56	1150-U56-V
Solenoid 24 V, for rod control	1150-U56-01	1150-U56-01V
Solenoid 12 V, for cam	1150-U58	1150-U58-V
Solenoid 24 V, for cam	1150-U58-01	1150-U58-01V
Cylinder cover Bio-Flex black (spare part)		
		1150-B33

Note:
This handle can be connected to the modules 3000-U32-02 and 3000-U47-02 or 3000-U47-07.

Further parts see page
– Cams (GH = 18) 3YC-120
– Rod control 3YA-110
3YA-120
3YA-140
– Spare key 12B-140

© EMKA Beschlagteile GmbH & Co. KG • 2016 • www.emka.com

EMKA®

Beschlagteile

Swinghandle 1154

PROGRAM 1150

EDELSTAHL Rost frei STAINLESS STEEL

Vandalism resistant

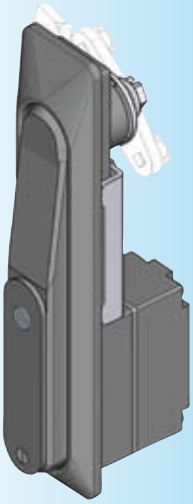

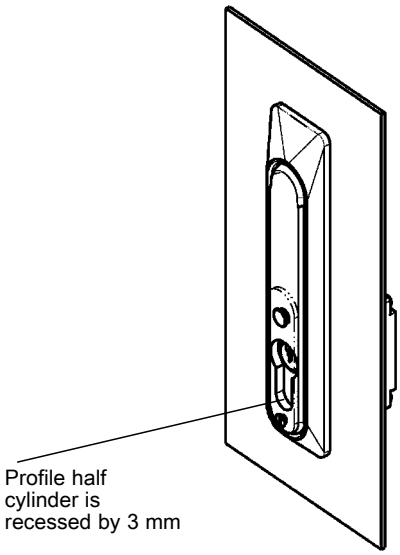

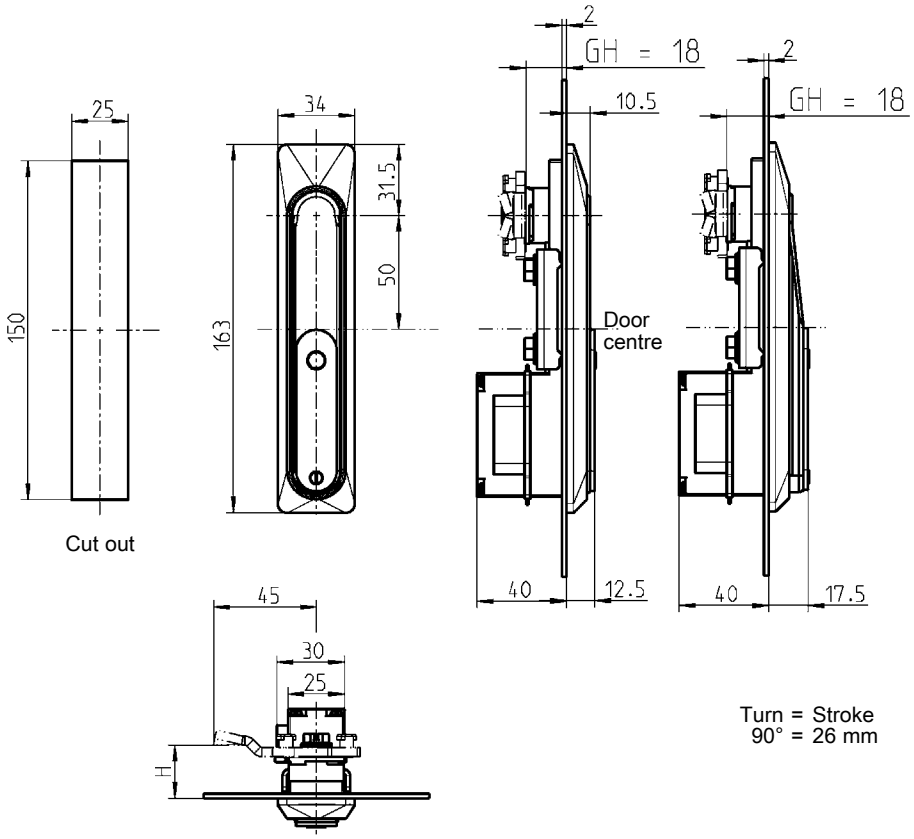

Suitable for profile half cylinder (length A = 30 or A = 35) DIN 18252 (EN 1303)

Swinghandle zinc die black powder coated, cap polyamide black, shaft zinc die zinc plated, fixing material m.s. zinc plated, with seal	
for profile half cylinder 40	1154-U1
for profile half cylinder 45	1154-U3
Swing handle AISI 316, shaft AISI 303, cap polyamide black, fixing material stainless steel, with seal	
for profile half cylinder 40	1154-U2

Further parts see page
– Cam (GH = 18) 3YC-120
– Profile half cylinder 3XB-120

© EMKA Beschlagteile GmbH & Co. KG • 2016 • www.emka.com

Swinghandle 1154 with electromechanical release and emergency opening

PROGRAM 1150

This handle is suitable for locking outdoor cabinets. By applying a 12 V, 24 V or 48 V DC Signal, the handle can be released. After pushing the handle briefly into the dish, it can be opened.
The integrated reed contact serves as remote control of the handle Status. For locking the handle has to be pushed into the dish until the lock mechanism latches. The supplied key is used for opening the handle in case of power failure. To open the cylinder cover the screw M3 has to be removed. Then it is possible to unlock by means of round / pin cylinder.

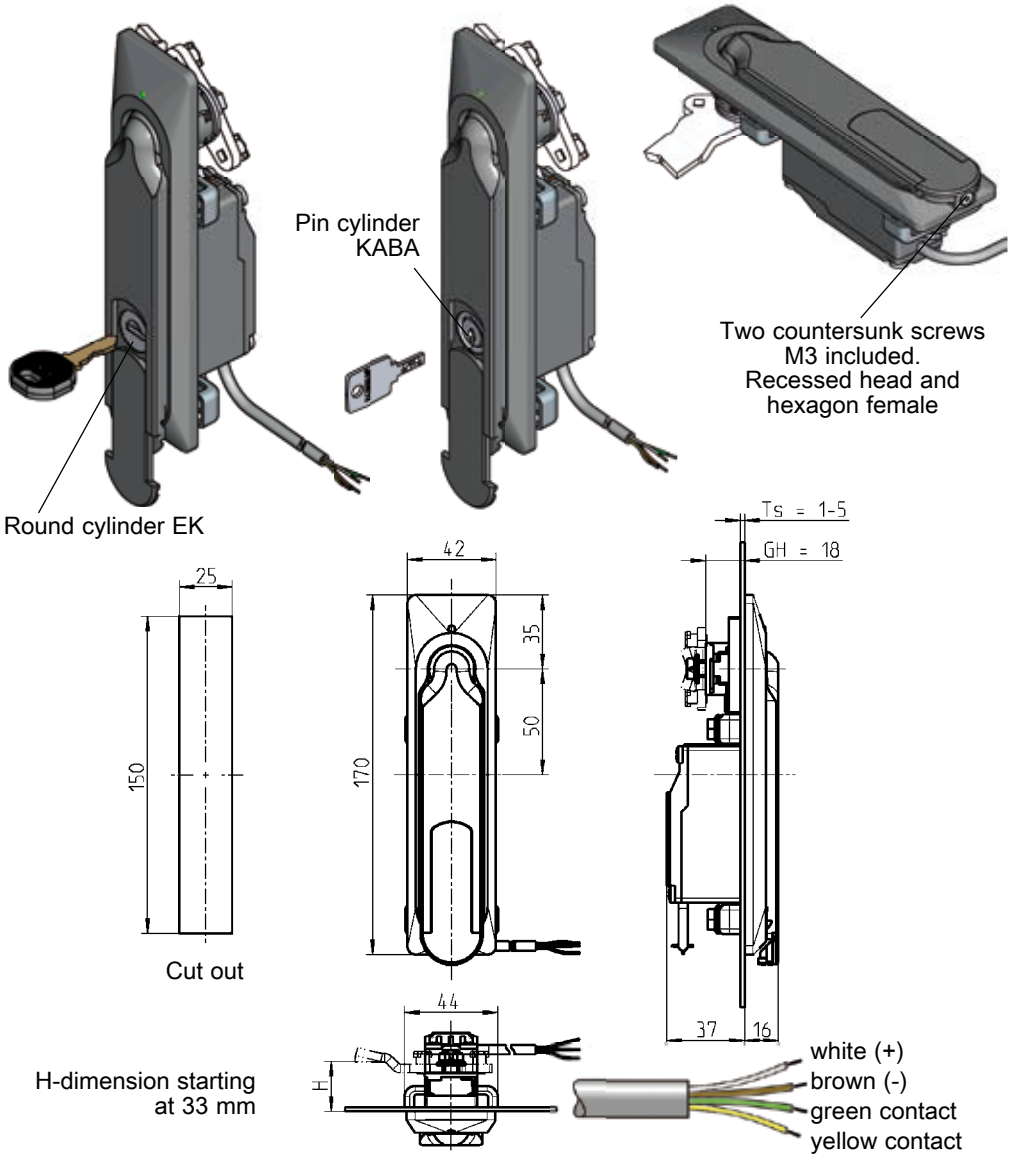

During release of handle the LED is illuminated.

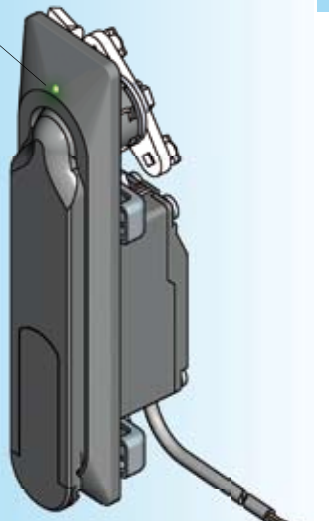

max. power-on time: 1 minute

Swinghandle shown transparent

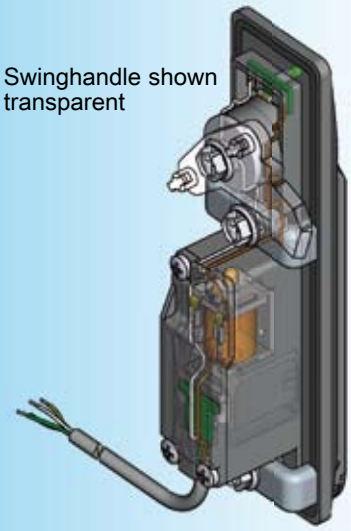

Swinghandle zinc die black powder coated, cap and dust cap polyamide GF black, shaft zinc die zinc plated, holder AISI 304, round cylinder EK with stainless steel cap and shutter, brass pin, solenoid with electronics, reed contact and LED, cable (4 m), screw M3 for cylinder cover AISI 304, fixing material m.s. zinc plated, with seal.
Each cylinder EK with one key silver steel with grip polyamide GF black
switching power contact: 48 VDC, 0.5 A

	keyed EK 333	keyed different
Round cylinder EK; 48V	1154-U6	1154-U6-V
Round cylinder EK, 24V	1154-U6-02	1154-U6-02V
Round cylinder EK; 12V	1154-U6-03	1154-U6-03V
	keyed EH6993	**keyed different**
Pin KABA Micron Plus; 48V	1154-U6-01	1154-U6-01V
Pin KABA Micron Plus; 24V	1154-U6-04	1154-U6-04V
Pin KABA Micron Plus; 12V	1154-U6-05	1154-U6-05V

Further parts see page
- Cam (stroke 26) H-dimension as of 33 mm — 3YC-120
- Rod — on request
- Spare key
  - EK — 12B-140
  - KABA — on request

© EMKA Beschlagteile GmbH & Co. KG • 2016 • www.emka.com

EMKA®

Beschlagteile

Notes:

Stainless steel swinghandle 1154 with WK2

PROGRAM 1150

EMKA Beschlagteile

Info | 1 Quarter turns | 2 Rod controls | 3 Locking systems

Suitable for profile half cylinder
(Length A=30) DIN 18252 (EN 1303)

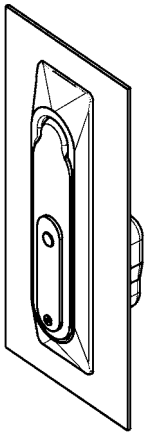

PIV Test certificate 20-15/07
The swinghandle has successfully passed the test according to WK 2 DIN V ENV 1630. The test was approved by the Test Institute for Locks and Fittings Velbert

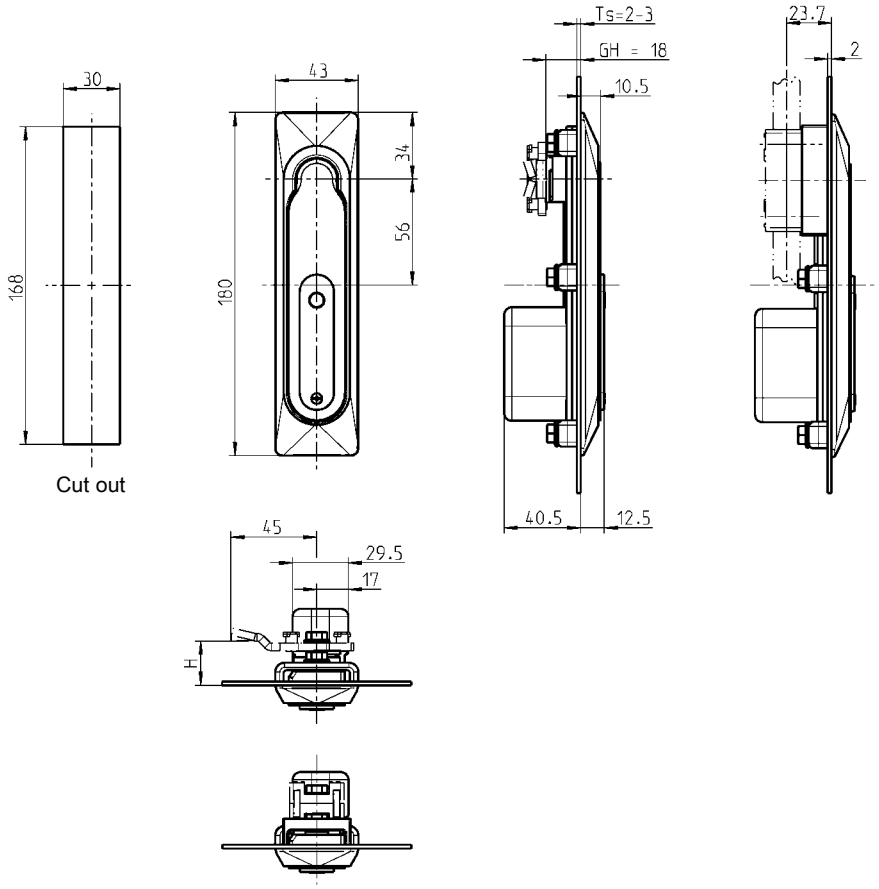

Cut out

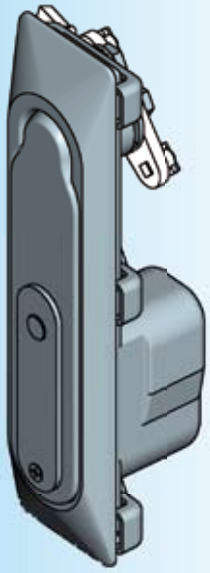

Turn 90° with cam

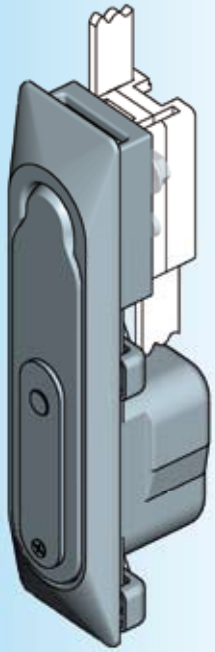

Further parts see page

– Cam (GH=18)	3YC-120
– Rod control for cam	3YC-180
– Rod control	3YA-440
– Profile half cylinder	3XB-120

Swinghandle AISI 316, shaft AISI 303, fastening material stainless steel, with seal	
for cam	1154-U4
for rod control	1154-U5

© EMKA Beschlagteile GmbH & Co. KG • 2016 • www.emka.com

Swinghandle 1154 with RC2 and electromechanical release; limited emergency opening

PROGRAM 1150

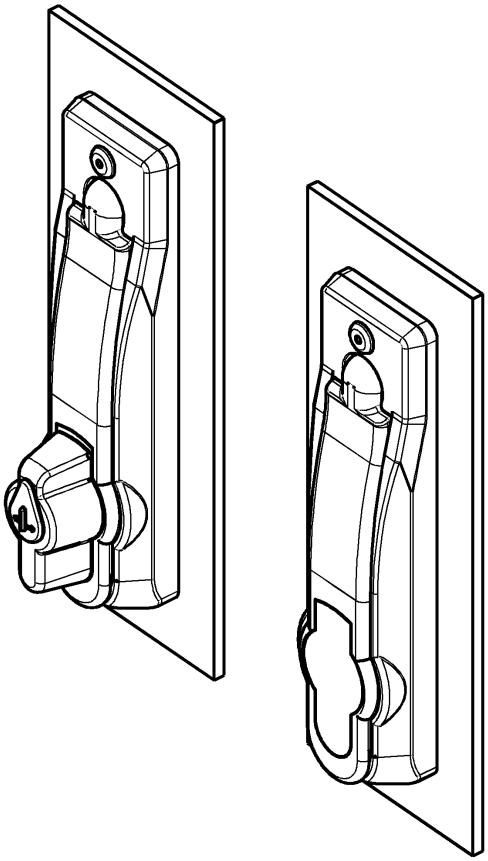

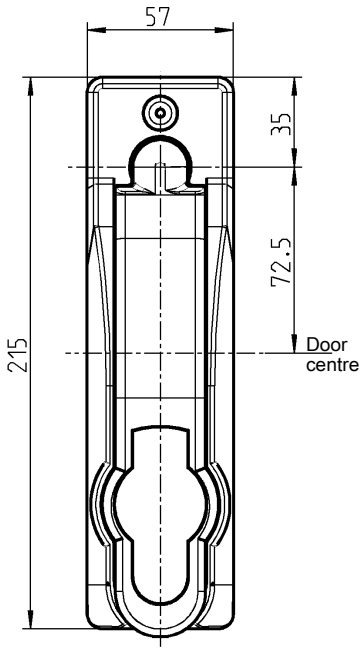

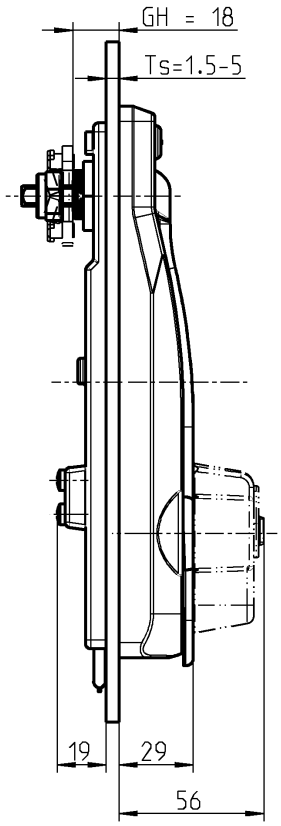

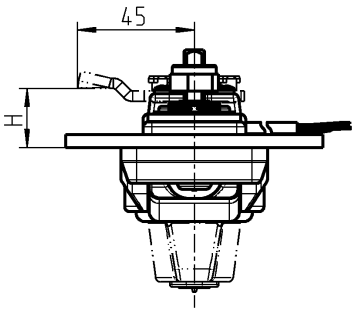

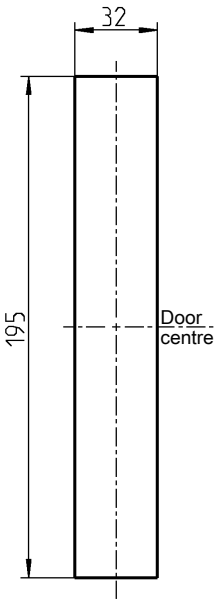

Cut out

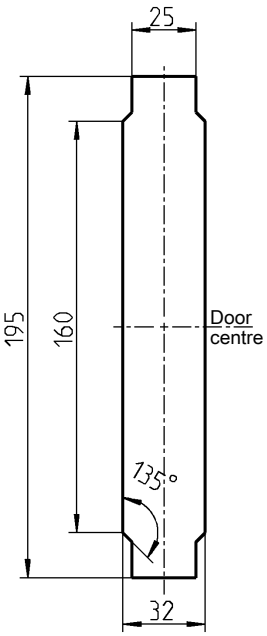

alternative cut out

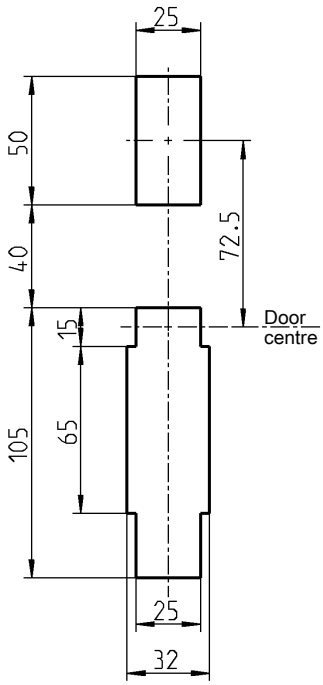

alternative cut out

© EMKA Beschlagteile GmbH & Co. KG • 2016 • www.emka.com

This handle is suitable for indoor and outdoor applications from -30°C to +80°C. It is released by applying a 48 V DC signal. On release of the handle, the LED is illuminated.
After the handle has been pressed into the dish, it will open.
The integrated reed contact indicate the handle status. To lock the handle must be pressed into the dish until the locking mechanism engages.
The ready-assembled swinghandle with cover is IP65 on the front and IP42 on the back; with the assembling set „mechanical opening" it is IP54.
With cover in place, the handle is vibration and shock tested and complies to resistance class standard "RC2". It is not possible to open the handle nondestructively after mounting the cover.

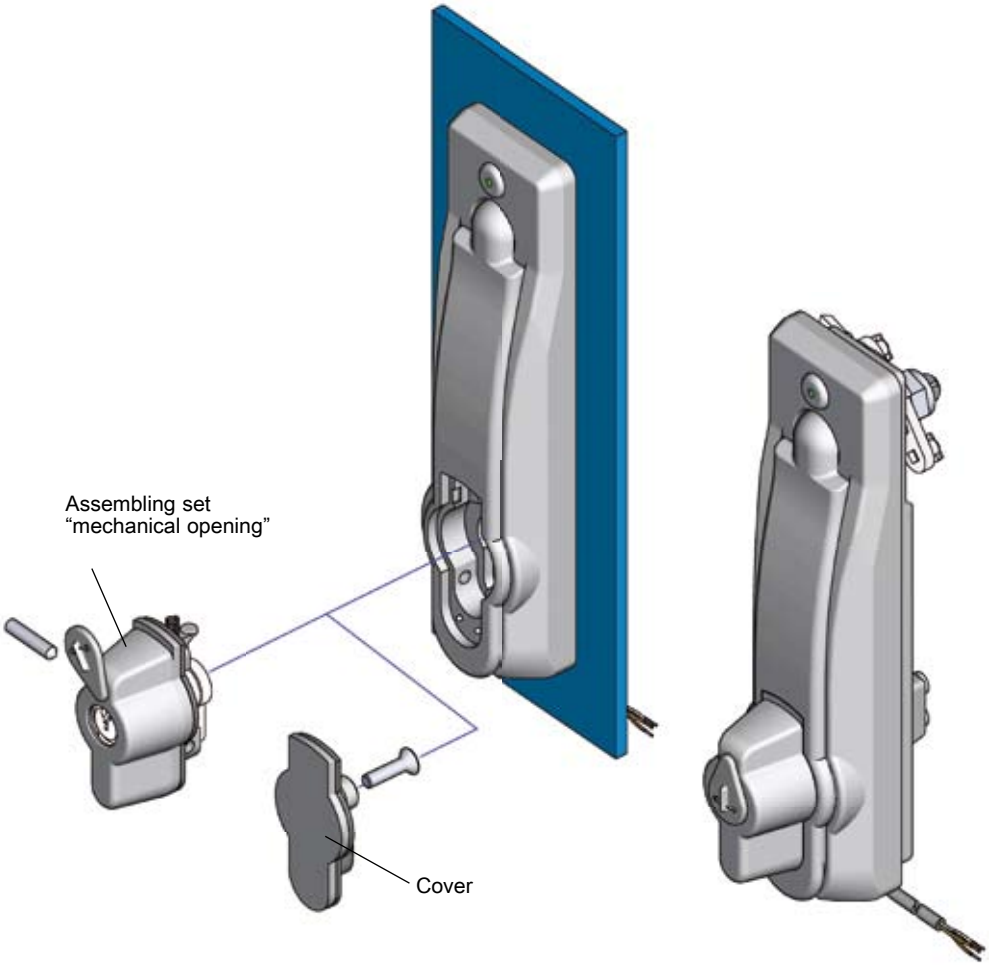

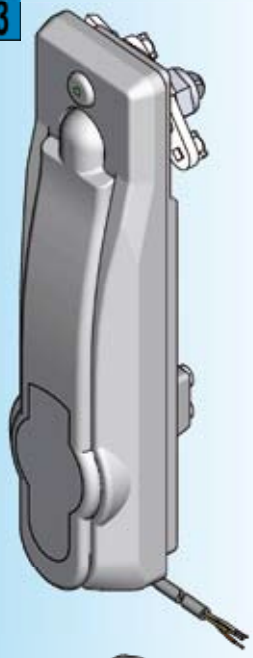

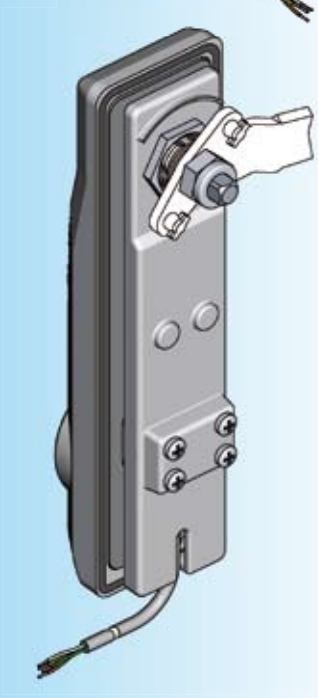

PIV Certificate 20-28/09
The swinghandle has successfully passed the test according to WK 2 DIN V ENV 1630 (RC2). The test was approved by the official Test Institute for Locks and Fittings in Velbert, Germany.

Swinghandle zinc die light grey powder coated (RAL 7035), Cover AISI 316 light grey powder coated (RAL 7035), shaft AISI 303, solenoid with electronics, reed contact, LED and cable (4m), fixing material m.s. zinc plated, with seal.	
	1154-U12
Assembling set "mechanical opening" polyamide light grey (RAL 7035), trigger zinc die zinc plated, spring stainless steel, fixing material m.s. zinc plated, with seal.	
for profile half zylinder	1154-U11

Assembly kit "mechanical opening" in stainless steel on request!

Further parts see page
– Cam (stroke 26) 3YC-120
– Rod 3ZB-540
– Profile half cylinder 3XB-320

© EMKA Beschlagteile GmbH & Co. KG • 2016 • www.emka.com

EMKA®

Beschlagteile

Swinghandle* 1153

PROGRAM 1150

suitable for profile half cylinder (length A = 30)
DIN 18252 (EN 1303)

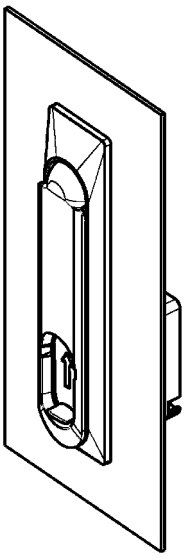

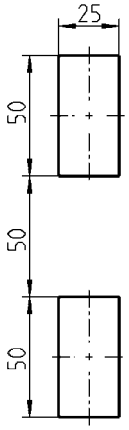

Cut out

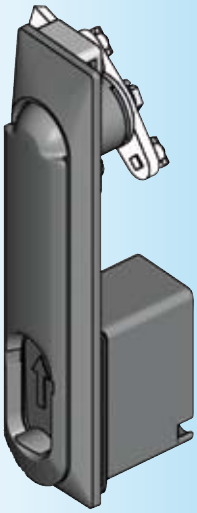

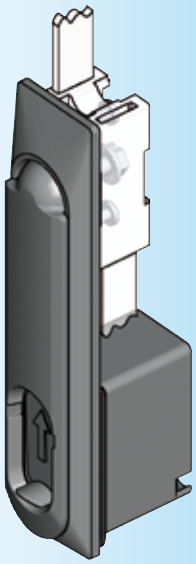

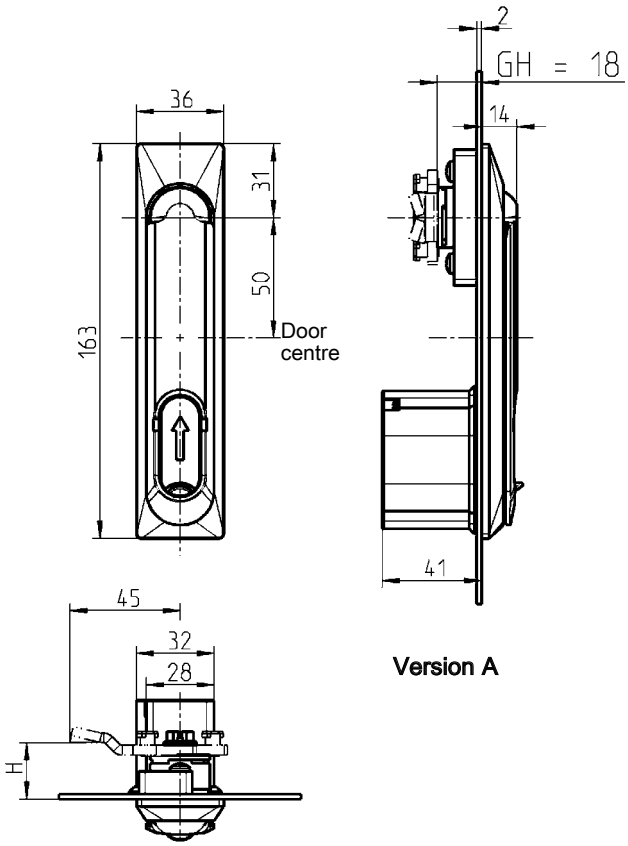

Version A

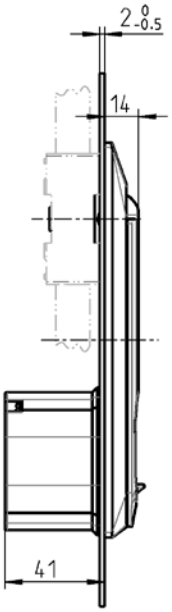

Earthing with version B

Attention: Housing length GH = 18 mm

* can be assembled in cut out of 1125/1225

Further parts see page
for version A
– Cam (GH = 18) 3YC-120
for version B
– Rod control only inside of the seal 3YA-110, 3YA-120, 3YA-140
for version A and B
– Profile half cylinder 3XB-120

Swinghandle zinc die black powder coated, fixing material m.s. zinc plated, shaft zinc die zinc plated, with seal	
Version A for cam	1153-U1
Rod control and earthing with version B	1153-U2

© EMKA Beschlagteile GmbH & Co. KG • 2016 • www.emka.com

Swinghandle 1151

PROGRAM 1150

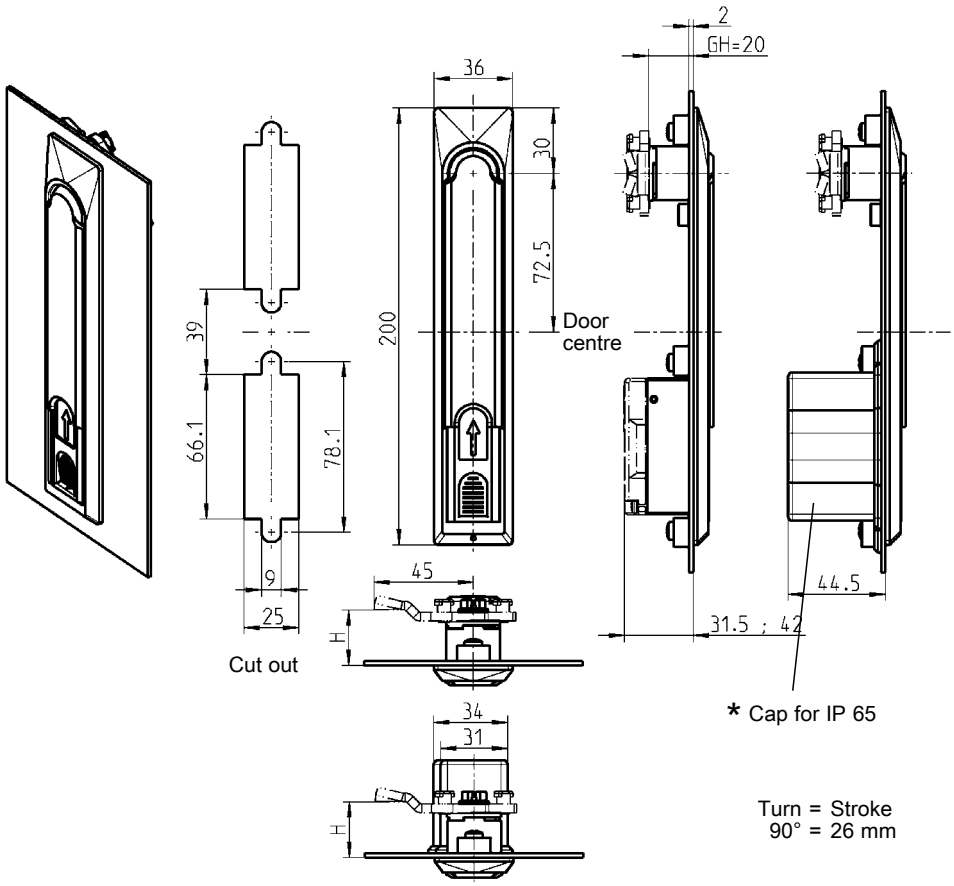

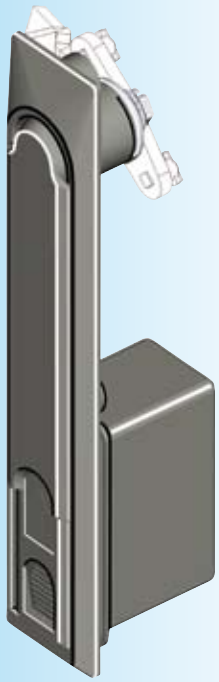

* Dimension:
38,5 (wide) x 97 (length), cap for profile half cylinder
35 (wide) x 97 (length), cap for insert and round cylinder

Note:
Swinghandle without locking set

Swinghandle zinc die black powder coated, fixing material m.s. zinc plated, shaft zinc die zinc plated, with seal	
IP-Rating: IP 54	1151-U1
IP 65 with:	
cap for profile half cylinder	1151-05
cap for insert and round cylinder	1151-05-01

Further parts see page

– Locking set	3XA-120
	3XA-140
– Locking set ELM	chapter 11
– Cam (GH = 20)	3YC-140

© EMKA Beschlagteile GmbH & Co. KG • 2016 • www.emka.com

EMKA®

Beschlagteile

Swinghandle 1151

PROGRAM 1150

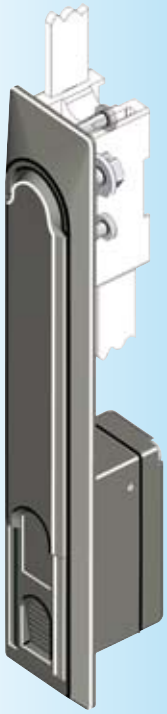

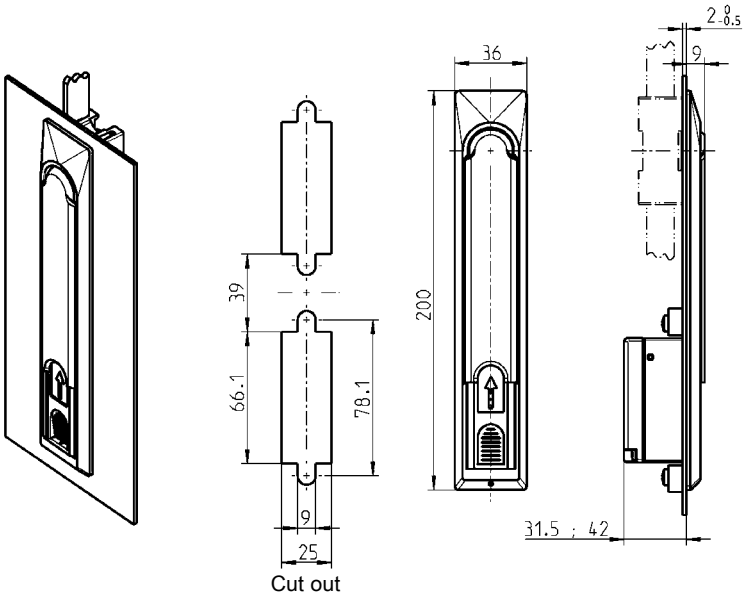

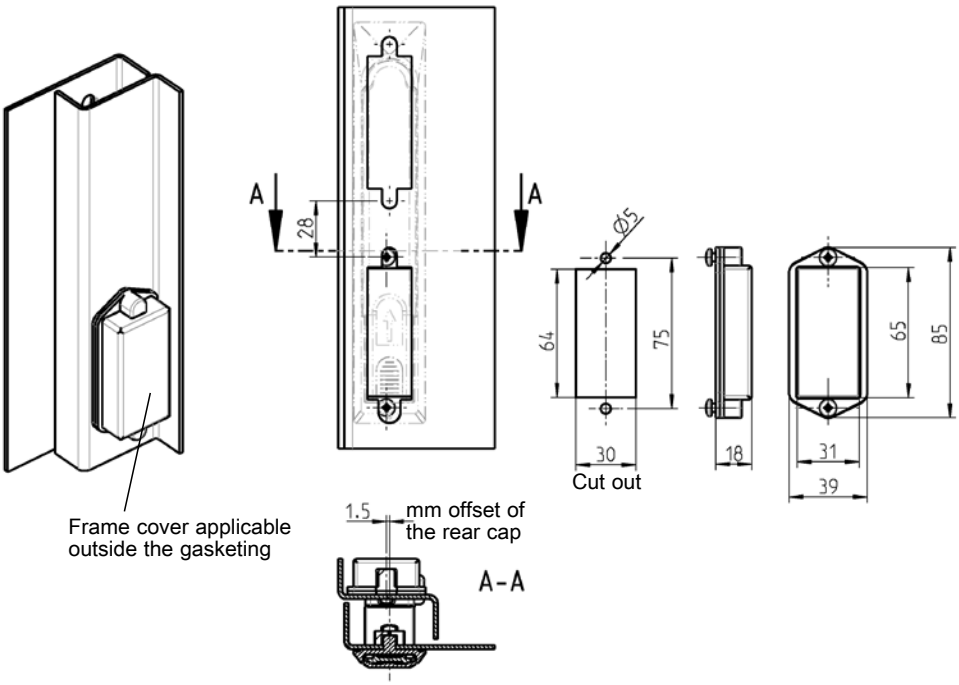

Note:
Swinghandle without locking set

Further parts see page

– Locking set	3XA-120
	3XA-140
– Locking set ELM	Kapitel 11
– Rod control	3YA-420

Swinghandle zinc die black powder coated, fixing material m.s. zinc plated, shaft zinc die zinc plated, with seal	
	1151-U3
Frame cover polyamide black, fixing material m.s. zinc plated for LH and RH application, with seal	
	2100-U31

© EMKA Beschlagteile GmbH & Co. KG • 2016 • www.emka.com

Swinghandle 1152

PROGRAM 1150

Swinghandle with push button or blind

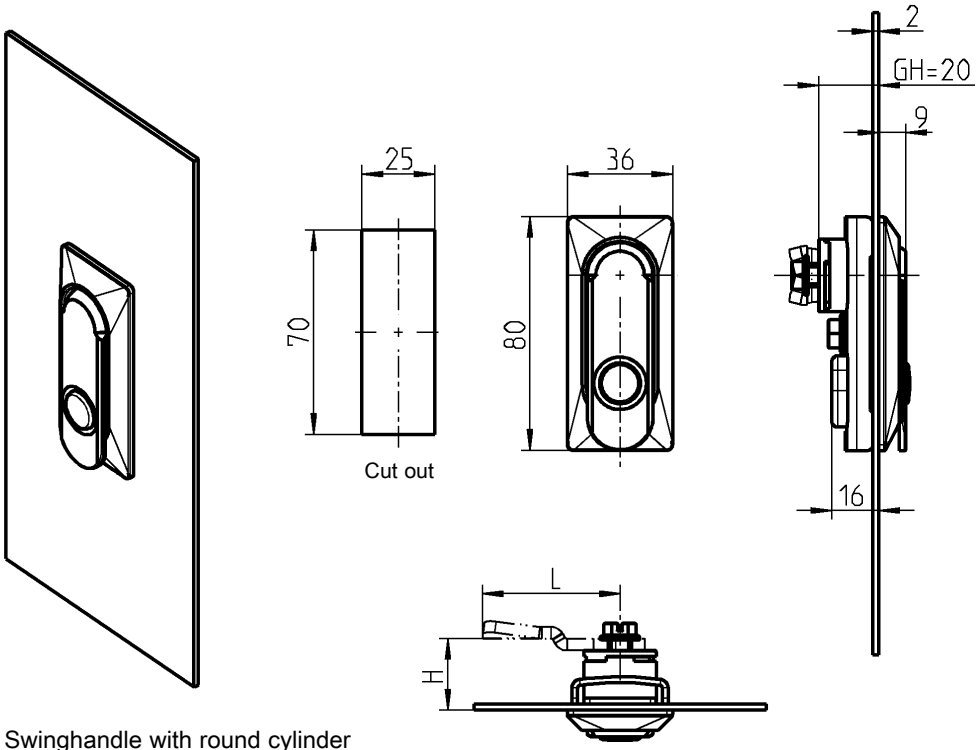

Swinghandle with round cylinder

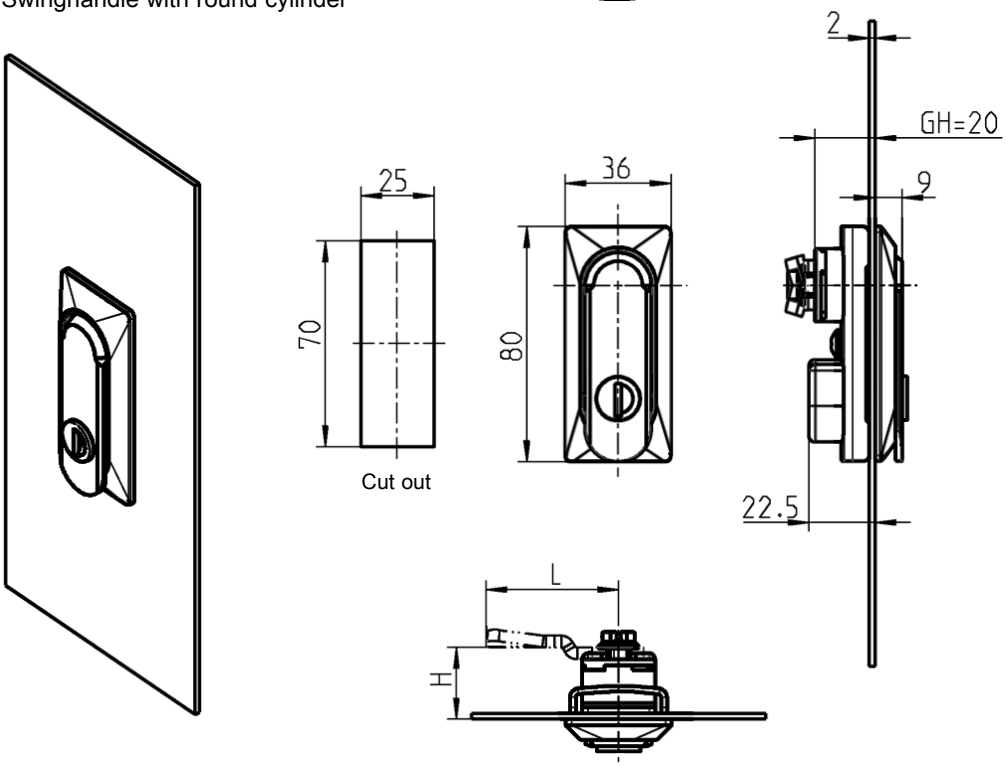

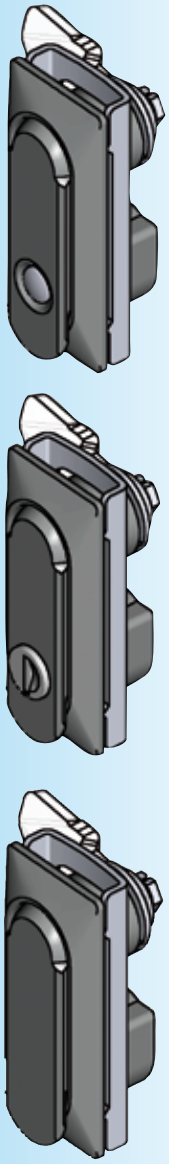

Turn 90°

Swinghandle zinc die black powder coated, round cylinder with stainless steel cap and shutter, fixing material m.s. zinc plated, shaft zinc die zinc plated, push button polyamide silver, with seal. Each round cylinder has one silver steel key with polyamide grip GF black.	
Push button	1152-U1
keyed EK 333	1152-U2
keyed different	1152-U4
Blank	1152-U3

Note:
Version in polyamide on request.

Further parts see page
– Cam without catch (not for cam with rod control) 1C-120
– Spare key 12B-140

© EMKA Beschlagteile GmbH & Co. KG • 2016 • www.emka.com

EMKA®

Beschlagteile

Swinghandle 1152 with compression

PROGRAM 1150

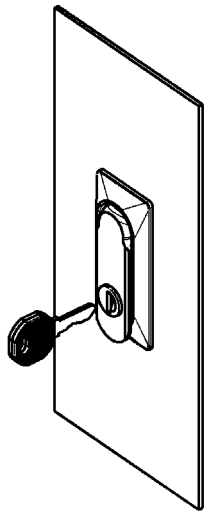

As the handle is pushed into the escutcheon (see fig 2) the cam moves 3 mm axially towards the door.

Fig. 1

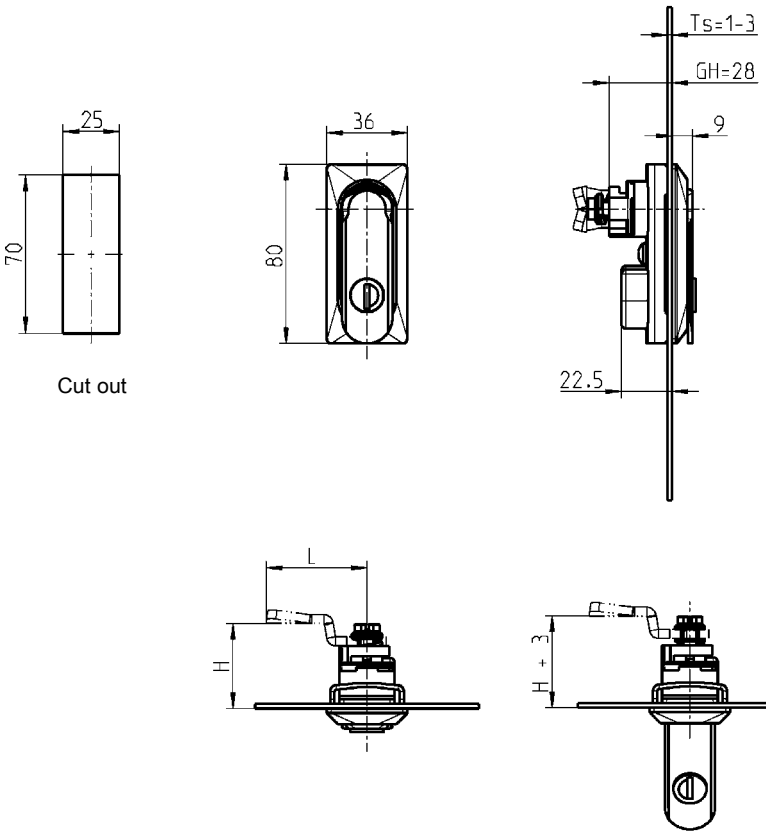

Cut out

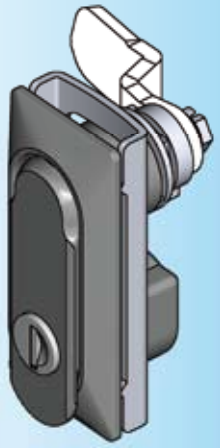

Fig. 2

Turn 90°

Note:
Suitable for door thickness from 1 – 3 mm (18, 16, 14, and 12 ga. steel).

Further types on request
- Company logos may be printed or embossed
- This handle has an “over-center” action and so is vibration resistant

Further parts see page
- Cam 1C-120
- Spare key 12B-140

Swinghandle polyamide GF black powder coated, round cylinder with stainless steel cap and shutter, fixing material m.s. zinc plated, shaft zinc die zinc plated, push button polyamide silver.
Each round cylinder has one silver steel key with polyamide grip GF black.

	without seal (IP 40)	with seal (IP 65)
Push button	1152-U9	1152-U9-01
keyed EK 333	1152-U10	1152-U10-01
keyed different	1152-U12	1152-U12-01
Blank	1152-U11	1152-U11-01

© EMKA Beschlagteile GmbH & Co. KG • 2016 • www.emka.com

Swing handle* 1155

PROGRAM 1150

Swinghandle with two locking options. For single point or multiple point locking system

Option 1:
Release using round cylinder, operation as with usual swinghandles of program 1150. The combination lock remains untouched.

Option 2:
Release using combination lock and wing knob. The round cylinder remains locked. The arrow on the wing knob indicates the opened or closed position.

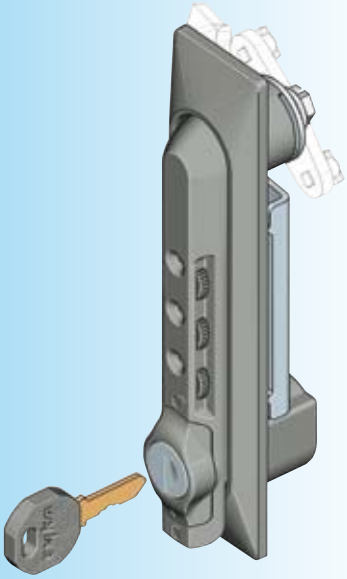

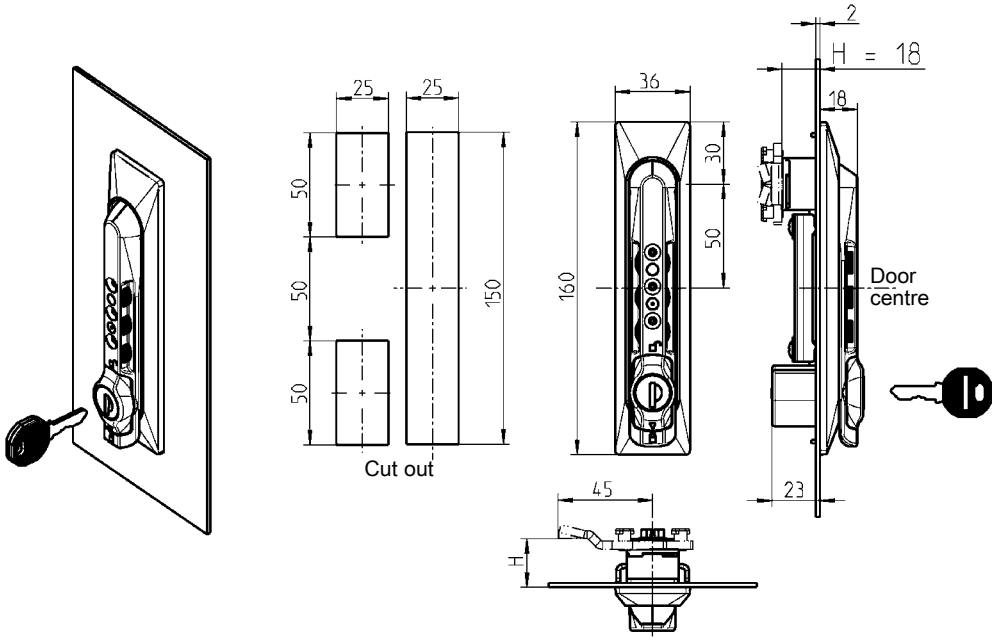

* can be assembled in cut out of 1125/1225

Swinghandle polyamide GF black powder coated, shaft zinc die zinc plated, round cylinder with stainless steel cap and shutter, fixing material m.s. zinc plated, with seal. Each round cylinder has one silver steel key with polyamide grip GF black.	
keyed EK 333	1155-U1
keyed different	1155-U2

Further parts see page
– Cam (GH = 18) 3YC-120
– Spare key 12B-140

© EMKA Beschlagteile GmbH & Co. KG • 2016 • www.emka.com

EMKA®

Beschlagteile

Swinghandle* 1150 with universal escutcheon

PROGRAM 1150

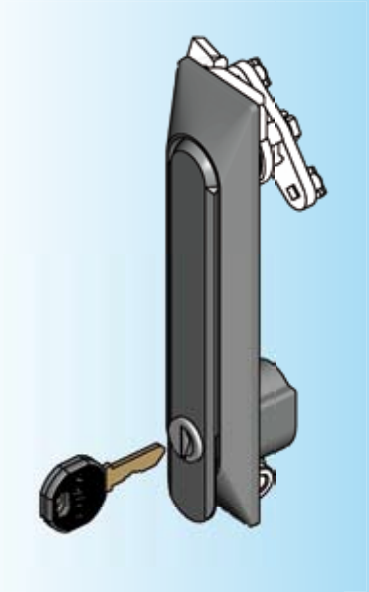

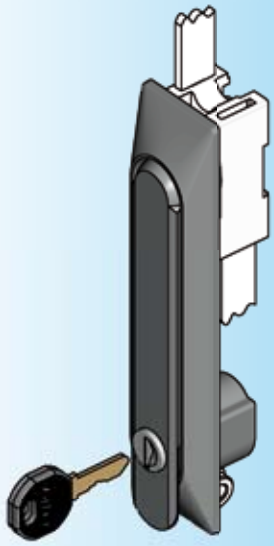

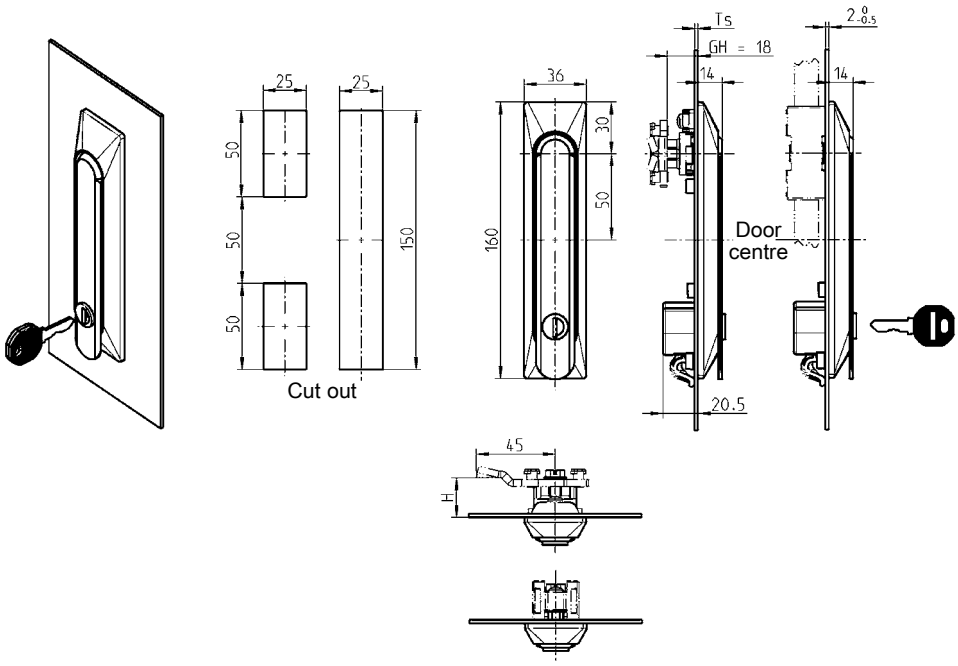

Attention:
Please order fixing material separatly.

Ts = 1,0 up to 3,0 mm depending on choice of fixing material

Swinghandle material on choice, escutcheon polyamide black, shaft zinc die zinc plated, with seal, round cylinder zinc die with stainless steel cap and shutter.
Each round cylinder has one silver steel key with polyamide grip GF black.

	Swinghandle polyamide GF black	Handle: Black powder coated zinc alloy
keyed EK 333	1150-U2-11	1150-U2-12
keyed different	1150-U4-11	1150-U4-12
Inserts: Chrome plated zinc alloy		
Square 6	1150-U9-11	1150-U9-12
Square 7	1150-U10-11	1150-U10-12
Square 8	1150-U11-11	1150-U11-12
Triangular 6,5 CNOMO	1150-U31-11	1150-U31-12
Triangular 7	1150-U12-11	1150-U12-12
Triangular 8	1150-U13-11	1150-U13-12
Double bit 3	1150-U14-11	1150-U14-12
Double bit 5	1150-U15-11	1150-U15-12
Daimler Benz	1150-U16-11	1150-U16-12
Slot 2x4	1150-U17-11	1150-U17-12
Hexagon 8 mm female with pin	1150-U18-11	1150-U18-12
Male hexagon 11 mm	1150-U19-11	1150-U19-12
Push button	1150-U20-11	1150-U20-12

* can be assembled in cut out of 1125/1225

Further parts see page
- Fixing material 3C-780
- Cam (GH = 18) 3YC-120
- Rod control 3YA-110, 3YA-120, 3YA-140
- Key 12B-120
- Spare key 12B-140

On request:
- Key retained in the unlocked position
- Other inserts
- handle blank (no locking system)

© EMKA Beschlagteile GmbH & Co. KG • 2016 • www.emka.com

Swinghandle* 1150 for padlock with universal escutcheon

PROGRAM 1150

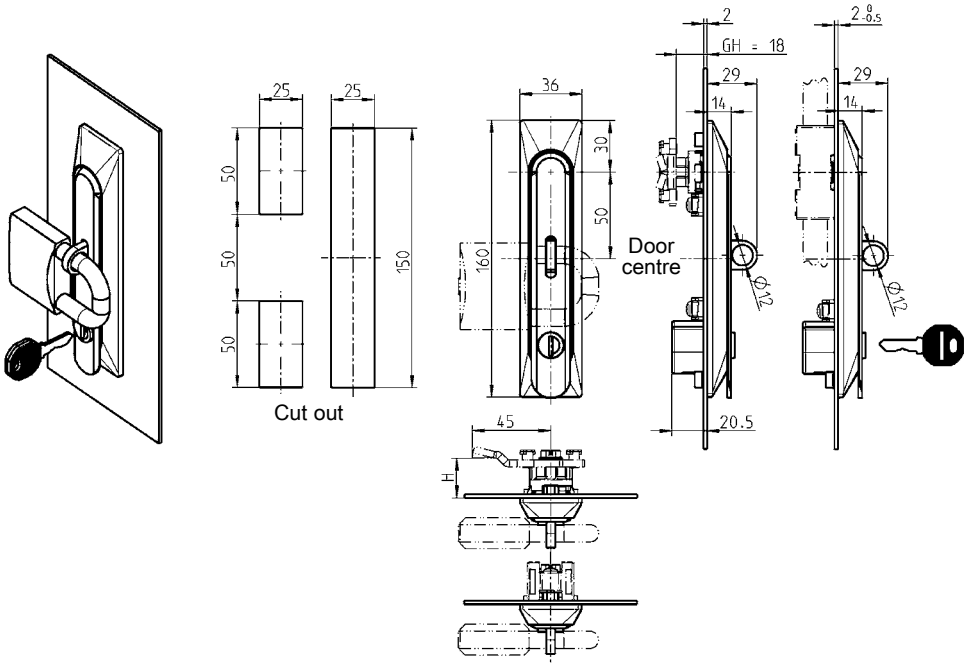

Attention:
Please order fixing material separatly.

Ts = 1,0 up to 3,0 mm depending on choice of fixing material

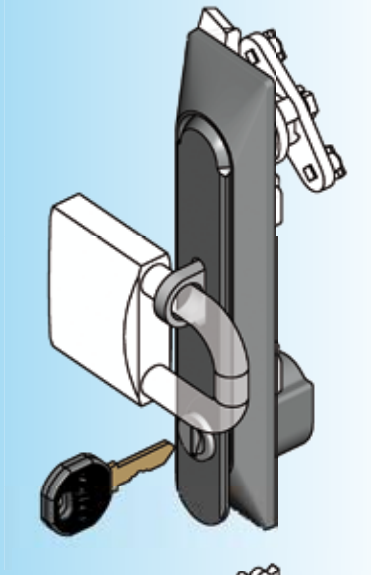

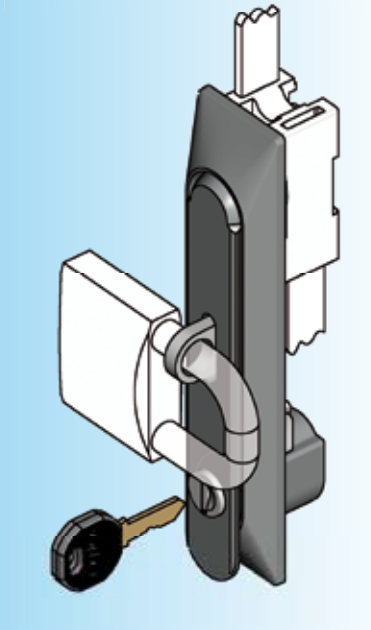

Swing handle zinc die black powder coated; dish polyamide black; padlock shackle AISI 316; shaft zinc die zinc plated, with seal; round cylinder zinc die with stainless steel cap and dust cap. Each round cylinder has one silver steel key with polyamide grip GF black.	
keyed EK 333	1150-U2-13
keyed different	1150-U4-13
Inserts: Chrome plated zinc alloy	
Square 6	1150-U9-13
Square 7	1150-U10-13
Square 8	1150-U11-13
Triangular 6,5 CNOMO	1150-U31-13
Triangular 7	1150-U12-13
Triangular 8	1150-U13-13
Double bit 3	1150-U14-13
Double bit 5	1150-U15-13
Daimler Benz	1150-U16-13
Slot 2x4	1150-U17-13
Hexagon 8 mm female with pin	1150-U18-13
Male hexagon 11 mm	1150-U19-13
Push button	1150-U20-13

* can be assembled in cut out of 1125/1225

Further parts see page

– Fixing material	3C-780
– Cam (GH = 18)	3YC-120
– Rod control	3YA-110
	3YA-120
	3YA-140
– Key	12B-120
– Spare key	12B-140

On request:
- Key retained in the unlocked position
- Other inserts
- handle blank (no locking system)

© EMKA Beschlagteile GmbH & Co. KG • 2016 • www.emka.com

EMKA

Beschlagteile

® Swing handle* 1150 with „Push to Lock“ function with universal dish

PROGRAMM 1150

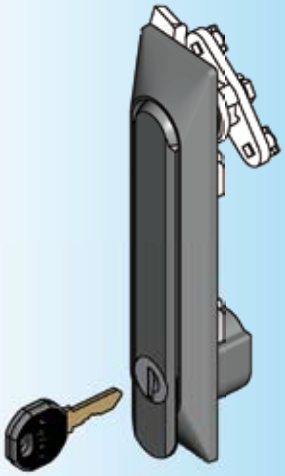

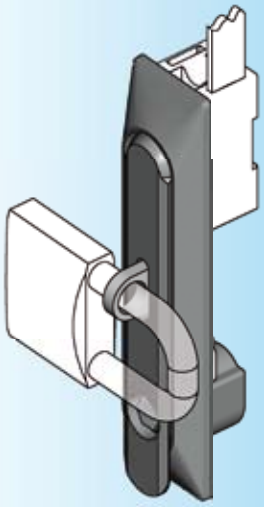

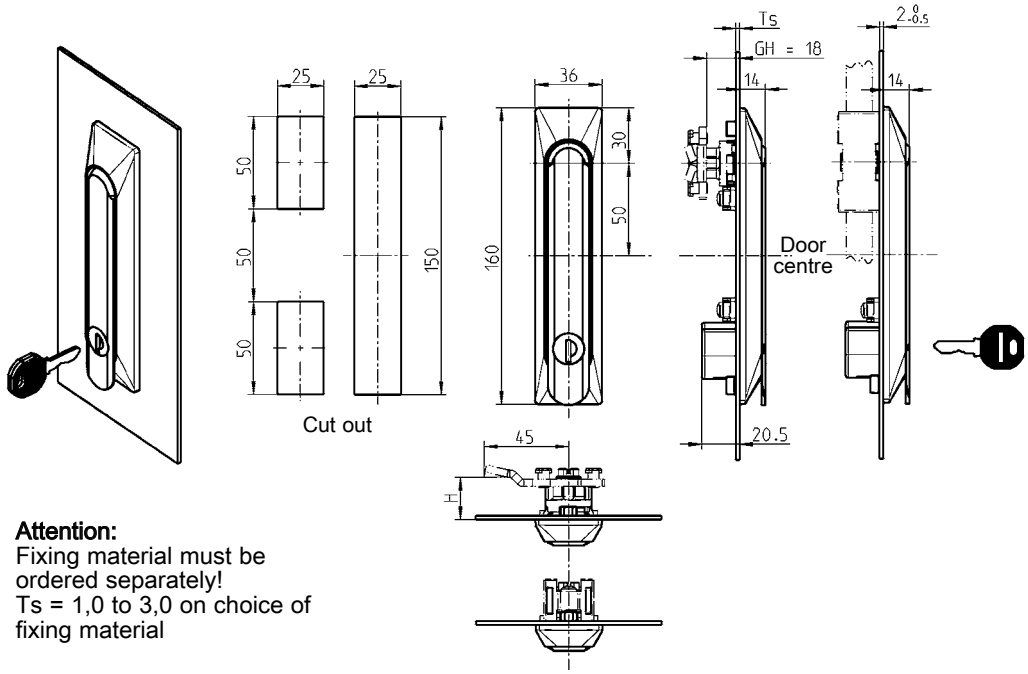

Attention:
Fixing material must be ordered separately!
Ts = 1,0 to 3,0 on choice of fixing material

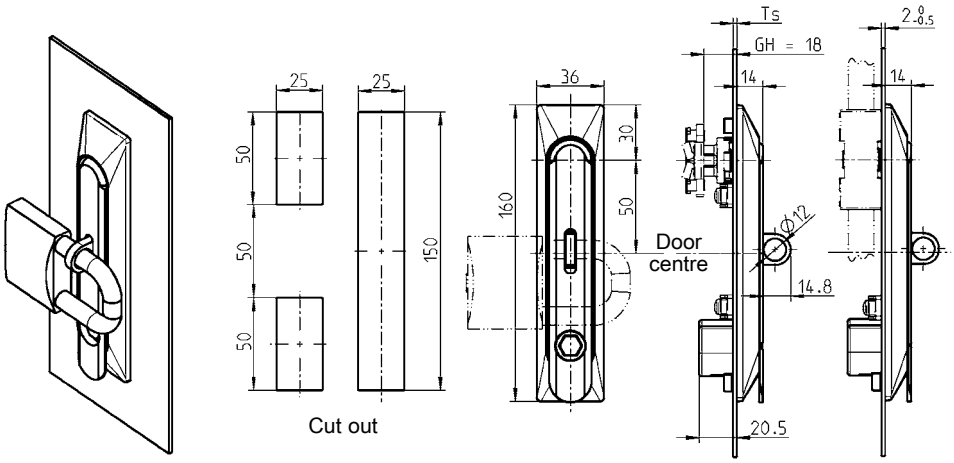

Swinghandle zinc die black powder coated, escutcheon polyamide black, shaft zinc die zinc plated, with seal, round cylinder zinc die with stainless steel cap and shutter.
Each round cylinder has one silver steel key with polyamide grip GF black.

		Push to lock	Push to lock for padlock
keyed EK 333	1150-U33-22	-	-
keyed different	1150-U34-22	-	-
Inserts: Chrome plated zinc alloy			
Square 6	1150-U36-22	1150-U36-30	1150-U36-31
Square 7	1150-U37-22	1150-U37-30	1150-U37-31
Square 8	1150-U38-22	1150-U38-30	1150-U38-31
Triangular 6,5 CNOMO	1150-U39-22	1150-U39-30	1150-U39-31
Triangular 7	1150-U40-22	1150-U40-30	1150-U40-31
Triangular 8	1150-U41-22	1150-U41-30	1150-U41-31
Double bit 3	1150-U42-22	1150-U42-30	1150-U42-31
Double bit 5	1150-U43-22	1150-U43-30	1150-U43-31
Daimler Benz	1150-U44-22	1150-U44-30	1150-U44-31
Slot 2x4	1150-U35-22	1150-U35-30	1150-U35-31
Hexagon 8 mm female with pin	1150-U45-22	1150-U45-30	1150-U45-31
Hexagon male SW 11	1150-U46-22	1150-U46-30	1150-U46-31

* can be assembled in cut out of 1125/1225

Stainless steel version see page 8A-630 to 6A-634

Further parts see page
- Fixing material 3C-780
- Cam (GH = 18) 3YC-120
- Rod control 3YA-110, 3YA-120, 3YA-140
- Key 12B-120
- Spare key 12B-140

On request:
- Key retained in the unlocked position
- Other inserts

© EMKA Beschlagteile GmbH & Co. KG • 2016 • www.emka.com

Swinghandle* with combination lock for universal escutcheon

PROGRAM 1150

Swinghandle with two locking options. For single point or multiple point locking system

Option 1:
Release using round cylinder, operation as with usual swinghandles of program 1150. The combination lock remains untouched.

Option 2:
Release using combination lock and wing knob. The round cylinder remains locked. The arrow on the wing knob indicates the opened or closed position.

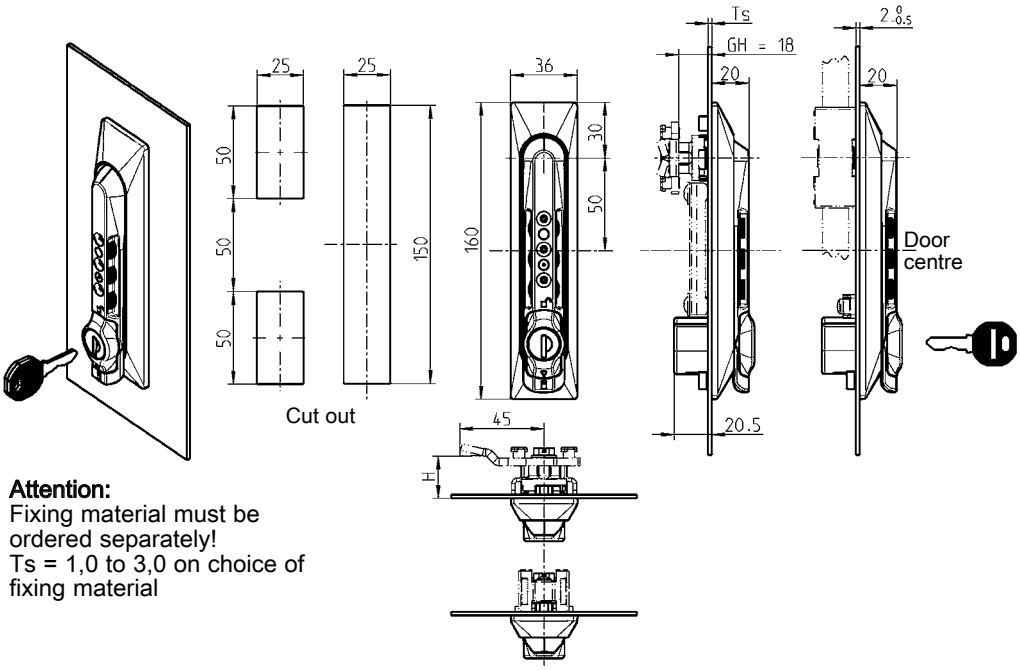

Attention:
Fixing material must be ordered separately!
Ts = 1,0 to 3,0 on choice of fixing material

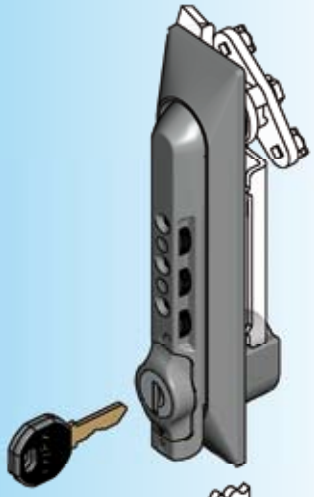

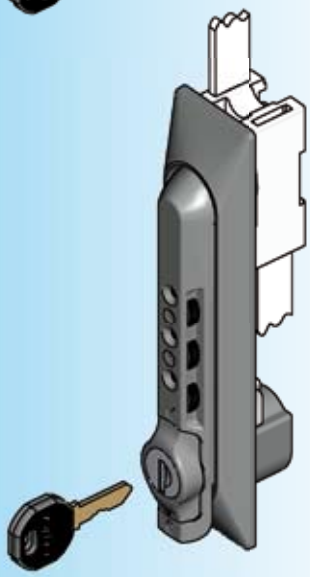

* can be assembled in cut out of 1125/1225

Further parts see page

– Fixing material	3C-780
– Cam (GH = 18)	3YC-120
– Rod control	3YA-110
	3YA-120
	3YA-140
– Spare key	12B-140

On request:
– Key retained in the unlocked position
– Other inserts

Swinghandle polyamide GF black, shaft zinc die zinc plated, with seal, round cylinder with stainless steel cap and shutter. Each round cylinder has one silver steel key with polyamide grip GF black.

keyed EK 333	1155-U1-11
keyed different	1155-U2-11

© EMKA Beschlagteile GmbH & Co. KG • 2016 • www.emka.com

EMKA

Beschlagteile

®Fixing material for swinghandle with universal escutcheon

PROGRAM 1150

Fixing material for swing handle with cam

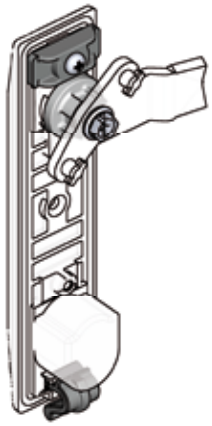

Hook and fastening module polyamide black, adapter zinc die zinc plated, fixing material m.s. zinc plated	
Ts = 1,0	1150-U50-01
Ts = 2,0	1150-U50-02
Ts = 3,0	1150-U50-03

Fixing material for swing handle with rod control

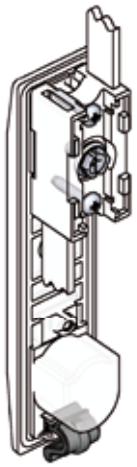

Hook polyamide GF black Fixing material m.s. zinc plated	
Ts = 1,0	-
Ts = 2,0 - 0,5	1150-U51-02
Ts = 3,0	-

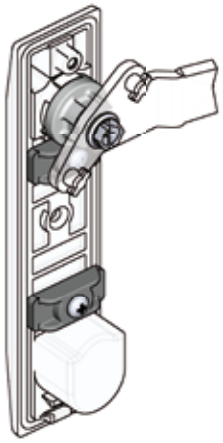

Fastening module polyamide GF black, adapter zinc die zinc plated, fixing material m.s. zinc plated	
Ts = 1,0 to 3,0	1150-U52

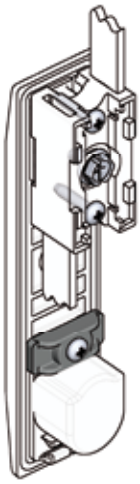

Fastening module polyamide GF black, fixing material m.s. zinc plated	
Ts = 2,0 - 0,5	1150-U53

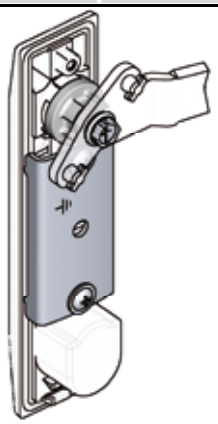

Adapter zinc die zinc plated, fastening plate and fixing material m.s. zinc plated	
Ts = 1,0 to 2,0	1150-U54

Further parts see page
- Swinghandle with universal escutcheon 3C-720 to 3C-750
- Cam (GH = 18) 3YC-120
- Rod control 3YA-110, 3YA-120, 3YA-140

On request:
- Other door thicknesses

© EMKA Beschlagteile GmbH & Co. KG • 2016 • www.emka.com

Swinghandle and escutcheon
Program 1160

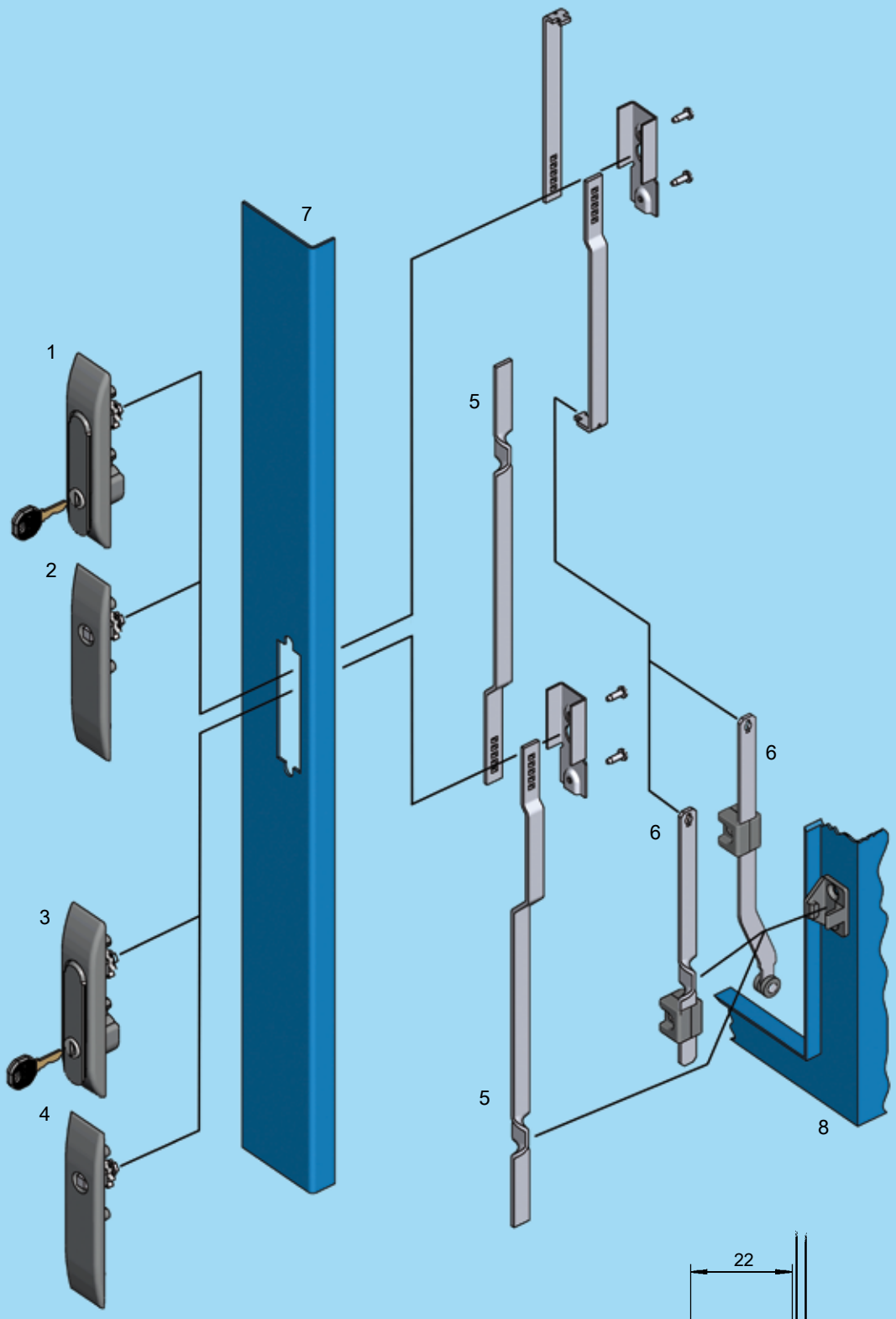

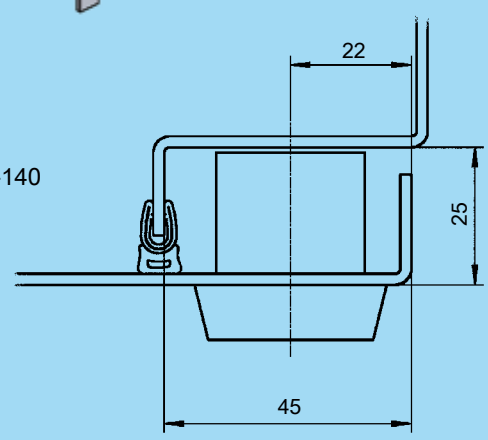

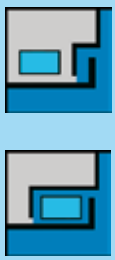

1	Swinghandle	3D-120, 3D-140
2	Escutcheon	3D-120
3	Swinghandle	3D-220
4	Escutcheon	3D-220
5	Rod	
6	Rod	
7	Door	
8	Cabinet/frame	

3D-100

EMKA®

Beschlagteile

Swinghandle / escutcheon with rods

PROGRAM 1160

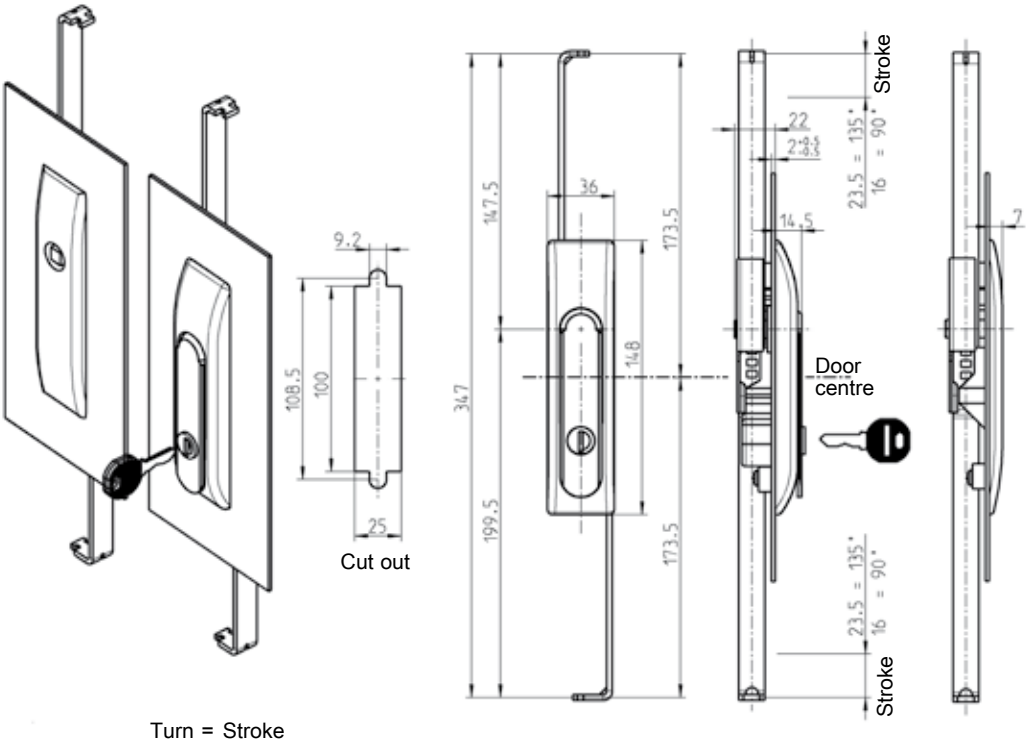

Turn = Stroke
135° = 23,5 mm
90° = 16 mm

Swinghandle zinc die black powder coated, shaft material on choice, rods m.s. zinc plated, fixing material m.s. zinc plated, shaft zinc die zinc plated, with seal, round cylinder zinc die with stainless steel cap and shutter, insert zinc die chrome plated, push button housing polyamide black, push button polyamide grey.
Each round cylinder has one silver steel key with polyamide grip GF black.

	Escutcheon	
	polya-mide	zinc die
keyed EK 333	1160-U1	1160-U3
keyed different	1160-U2	1160-U4
Square 6	1160-U9	1160-U20
Square 7	1160-U10	1160-U21
Square 8	1160-U11	1160-U22
Triangular 6,5 CNOMO	1160-U32	1160-U31
Triangular 7	1160-U12	1160-U23
Triangular 8	1160-U13	1160-U24
Double bit 3	1160-U14	1160-U25
Double bit 5	1160-U15	1160-U26
Daimler Benz	1160-U16	1160-U27
Slot 2x4	1160-U17	1160-U28
Hexagon female 8 with pin	1160-U18	1160-U29
Hexagon 11 male	1160-U19	1160-U30
Push button	1160-U35	1160-U36

Escutcheon polyamide GF black, insert zinc die chrome plated, rods m.s. zinc plated, fixing material m.s. zinc plated, with seal

with mask	
Double bit 3	1160-U52
Double bit 5	1160-U53
FIAT	1160-U64
without mask	
Square 6	1160-U54
Square 7	1160-U55
Square 8	1160-U56
Triangular 6,5 CNOMO	1160-U65
Triangular 7	1160-U57
Triangular 8	1160-U58
Square female 8	1160-U63
Daimler Benz	1160-U59
Slot 2x4	1160-U60
Double bit 3	1160-U61
Double bit 5	1160-U62
Eastern Europe Ø 13	1160-U66

Further parts see page
– Rod
outside 3ZA-120, 3ZA-320
inside 3ZB-120, 3ZB-220
– Spare key 12B-140

© EMKA Beschlagteile GmbH & Co. KG • 2016 • www.emka.com

Swinghandle with rods

PROGRAM 1160

Swinghandle for
assembled rod control

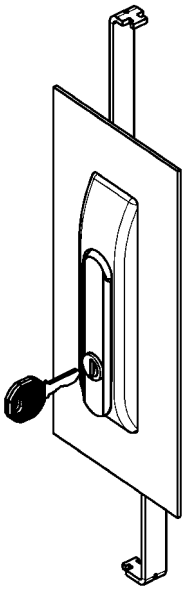

Turn = Stroke
135° = 23,5 mm
90° = 16 mm

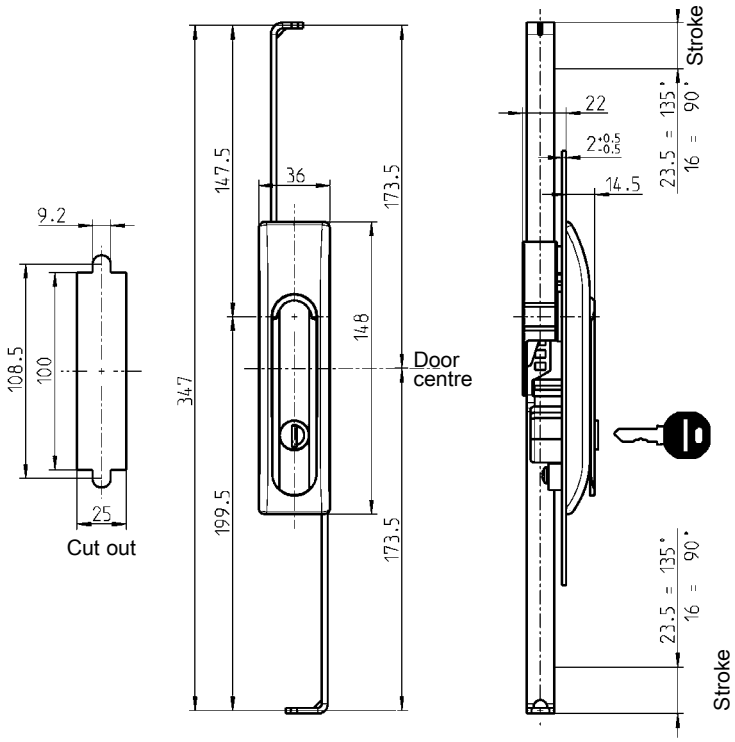

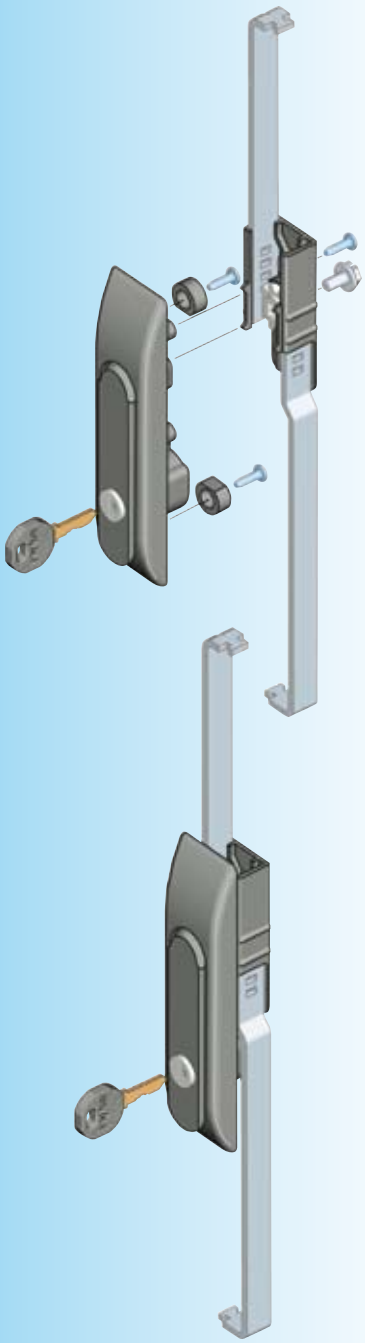

Swinghandle zinc die black powder coated, shaft material on choice, rods m.s. zinc plated, fixing material m.s. zinc plated, shaft zinc die zinc plated, with seal, round cylinder zinc die with stainless steel cap and shutter, insert zinc die chrome plated, push button housing polyamide black, push button polyamide grey. Each round cylinder has one silver steel key with polyamide grip GF black.		
	Escutcheon	
	polyamide	zinc die
keyed EK 333	1160-U201	1160-U203
keyed different	1160-U202	1160-U204
Push button	1160-U235	1160-U236
Rod control polyamide GF black, rods m.s. zinc plated		
RH version		1160-U200-RE
LH version		1160-U200-LI

Further parts see page
– Rod
outside 3ZA-120, 3ZA-320
inside 3ZB-120, 3ZB-220
– Spare key 12B-140

© EMKA Beschlagteile GmbH & Co. KG • 2016 • www.emka.com

EMKA®

Beschlagteile

Swinghandle / escutcheon with rods

PROGRAM 1160

RL IP 65

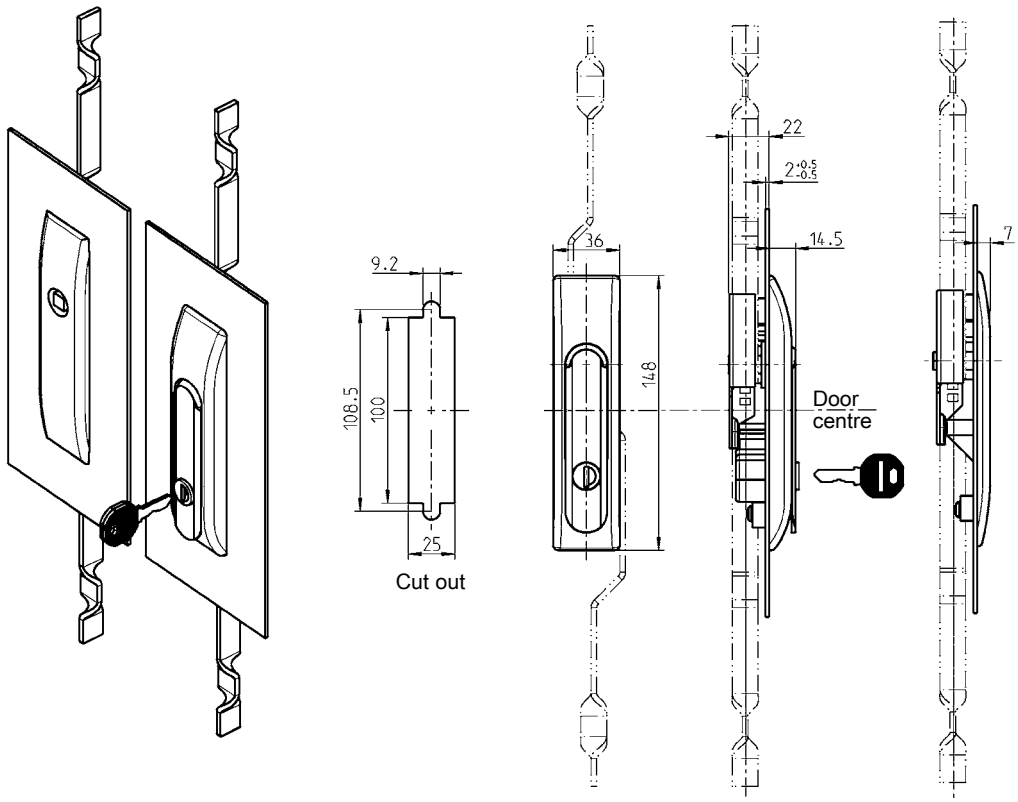

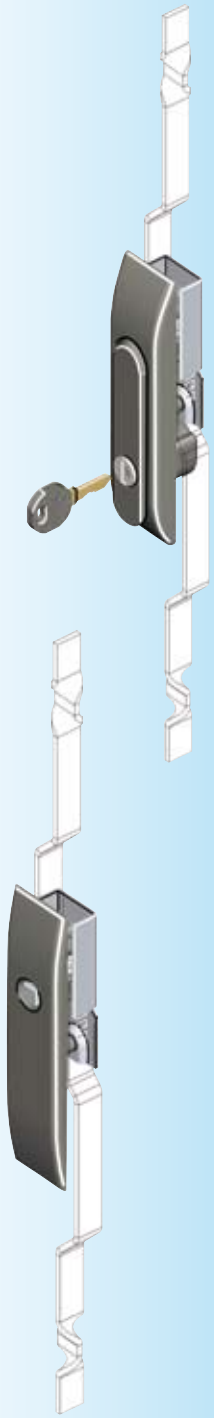

Swinghandle zinc die black powder coated, escutcheon material on choice, fixing material m.s. zinc plated, shaft zinc die zinc plated, with seal, round cylinder zinc die with stainless steel cap and shutter, insert zinc die chrome plated, push button housing polyamide black, push button polyamide grey.
Each round cylinder has one silver steel key with polyamide grip GF black.

	Escutcheon	
	polyamide	zinc die
keyed EK 333	1160-U101	1160-U103
keyed different	1160-U102	1160-U104
Square 6	1160-U109	1160-U120
Square 7	1160-U110	1160-U121
Square 8	1160-U111	1160-U122
Triangular 6,5 CNOMO	1160-U132	1160-U131
Triangular 7	1160-U112	1160-U123
Triangular 8	1160-U113	1160-U124
Double bit 3	1160-U114	1160-U125
Double bit 5	1160-U115	1160-U126
Daimler Benz	1160-U116	1160-U127
Slot 2x4	1160-U117	1160-U128
Hexagon female 8 with pin	1160-U118	1160-U129
Hexagon 11 male	1160-U119	1160-U130
Push button	1160-U135	1160-U136

Escutcheon polyamide GF black, insert zinc die chrome plated, rods m.s. zinc plated, fixing material m.s. zinc plated, with seal

with mask	
Double bit 3	1160-U152
Double bit 5	1160-U153
FIAT	1160-U164
without mask	
Square 6	1160-U154
Square 7	1160-U155
Square 8	1160-U156
Triangular 6,5 CNOMO	1160-U165
Triangular 7	1160-U157
Triangular 8	1160-U158
Square female 8	1160-U163
Daimler Benz	1160-U159
Slot 2x4	1160-U160
Double bit 3	1160-U161
Double bit 5	1160-U162
Eastern Europe Ø 13	1160-U166

Further parts see page
– Rod
outside 3ZA-420
– Spare key 12B-140

© EMKA Beschlagteile GmbH & Co. KG • 2016 • www.emka.com

Swinghandle and escutcheon
Program 1180

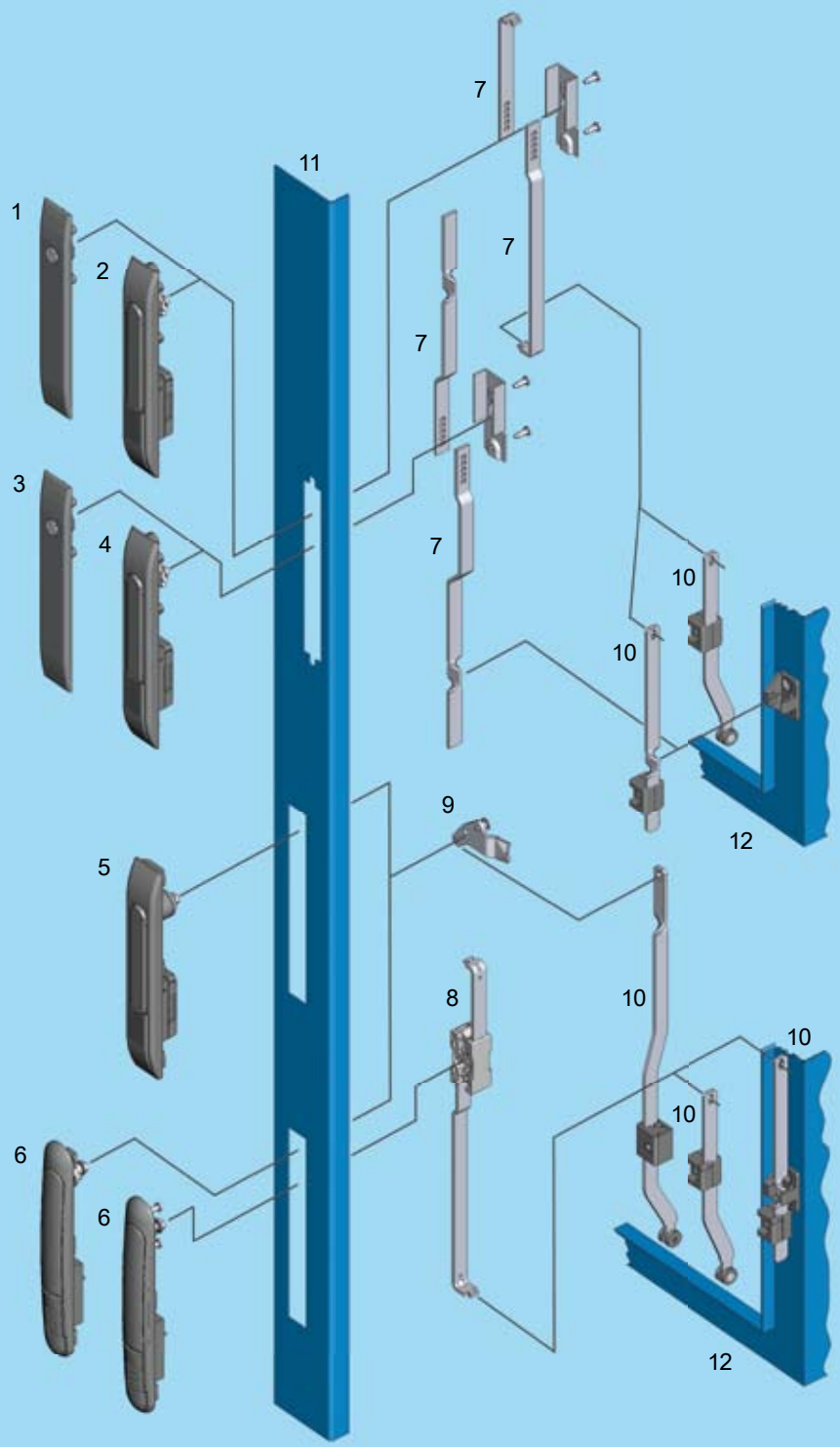

1	Escutcheon	3E-120
2	Swinghandle 1180	3E-120, 3E-140
3	Escutcheon	3E-220
4	Swinghandle 1180	3E-220
5	Swinghandle 1180	3E-320
6	Swinghandle 1185	3E-520, 3E-540
7	Rod	
8	Rod control	
9	Cam	
10	Rod	
11	Door	
12	Cabinet/frame	

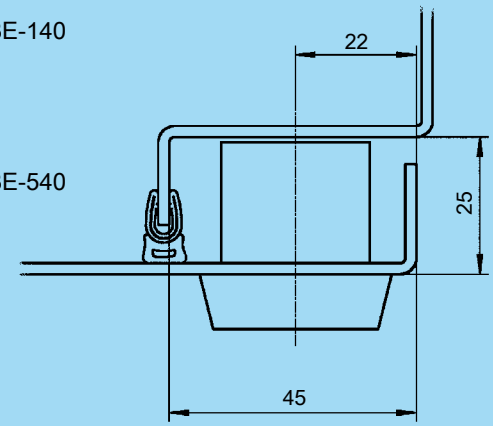

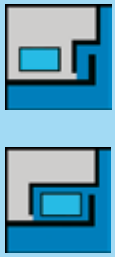

3E-100

EMKA®

Beschlagteile

Swinghandle 1180 or escutcheon with rods

PROGRAM 1180

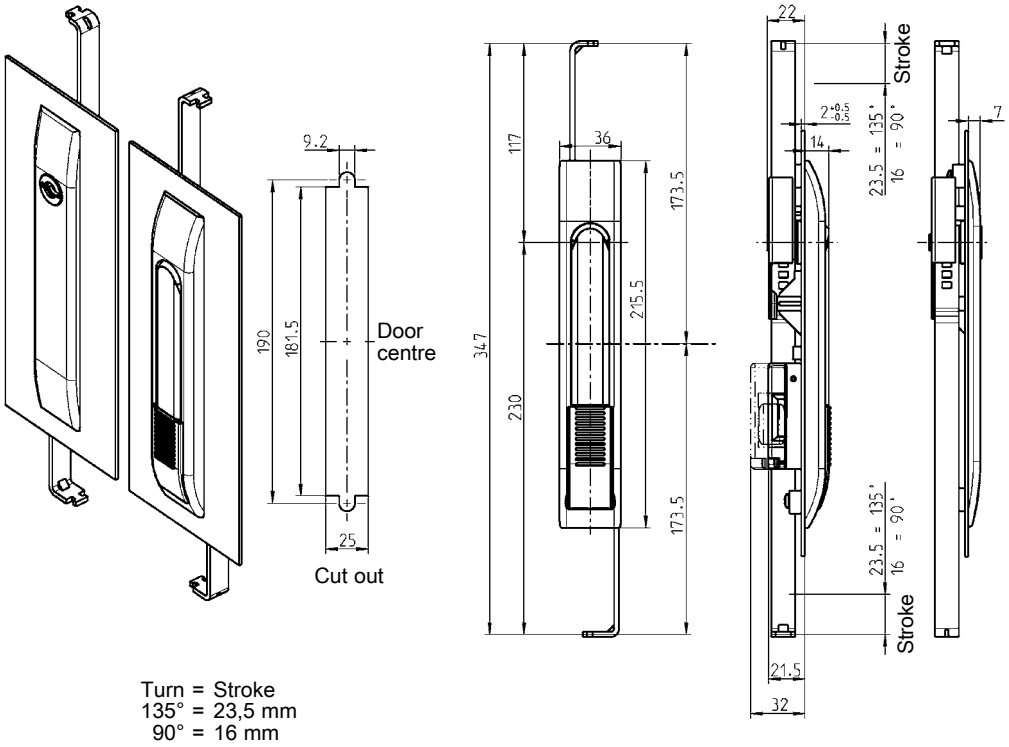

Turn = Stroke
135° = 23,5 mm
90° = 16 mm

Swinghandle polyamide GF black with push button (2100-U57), handle zinc die black, shaft zinc die zinc plated, rods m.s. zinc plated, fixing material m.s. zinc plated, with seal	
	1180-U1
Escutcheon polyamide GF black, insert zinc die chrome plated, rods m.s. zinc plated, fixing material m.s. zinc plated, with seal	
with mask	
Double bit 3	1180-U2
Double bit 5	1180-U3
FIAT	1180-U14
without mask	
Square 6	1180-U4
Square 7	1180-U5
Square 8	1180-U6
Triangular 6,5 CNOMO	1180-U15
Triangular 7	1180-U7
Triangular 8	1180-U8
Square female 8	1180-U13
Daimler Benz	1180-U9
Slot 2x4	1180-U10
Double bit 3	1180-U11
Double bit 5	1180-U12
Eastern Europe Ø 13	1180-U16

Further parts see page
– Key 12B-120
– Locking set 3XA-120
3XA-240
– Locking set ELM Chapter 11
– Rod
outside 3ZA-120
3ZA-320
inside 3ZB-120
3ZB-220

© EMKA Beschlagteile GmbH & Co. KG • 2016 • www.emka.com

Swinghandle 1180 with rods

PROGRAM 1180

Swinghandle for
assembled rod control

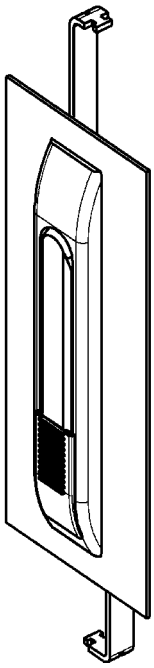

Turn = Stroke
135° = 23,5 mm
90° = 16 mm

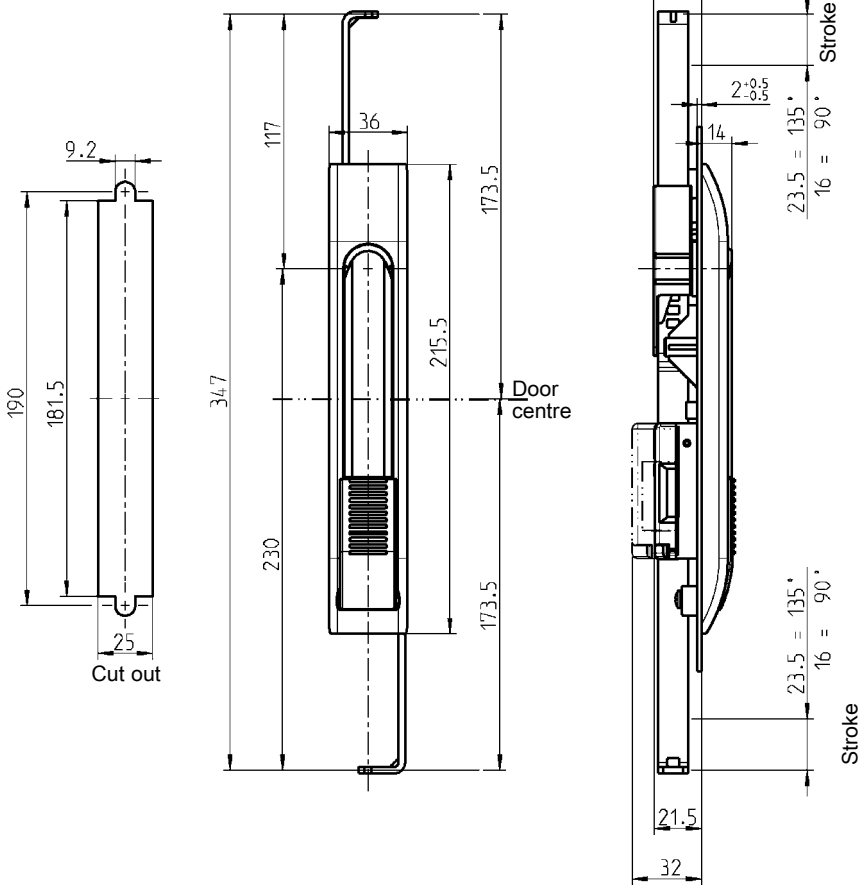

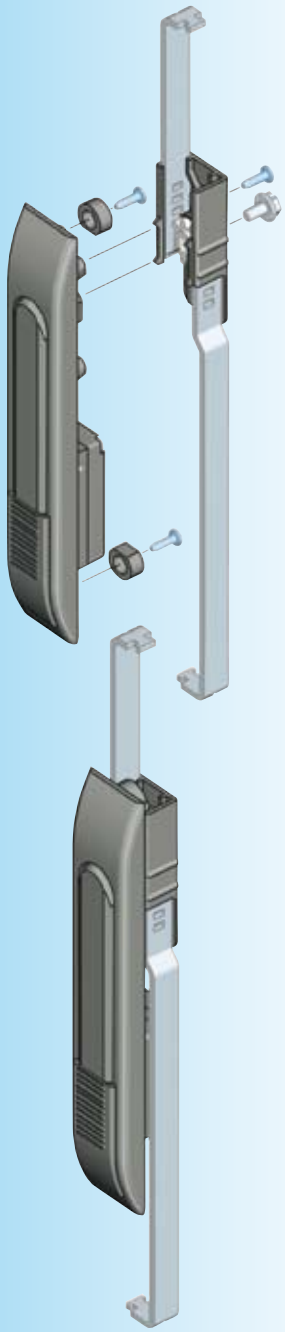

Swinghandle polyamide GF black with push button (2100-U57), handle zinc die black powder coated, shaft zinc die zinc plated, fixing material m.s. zinc plated, with seal	
	1180-U301
Rod control polyamide GF black, rods m.s. zinc plated	
RH version	1180-U200-RE
LH version	1180-U200-LI

Further parts see page

– Locking set	3XA-120 3XA-240
– Locking set ELM	Chapter 11
– Rod	
outside	3ZA-120 3ZA-320
inside	3ZB-120 3ZB-220

© EMKA Beschlagteile GmbH & Co. KG • 2016 • www.emka.com

EMKA®

Beschlagteile

Swinghandle 1180 or escutcheon for rods

PROGRAM 1180

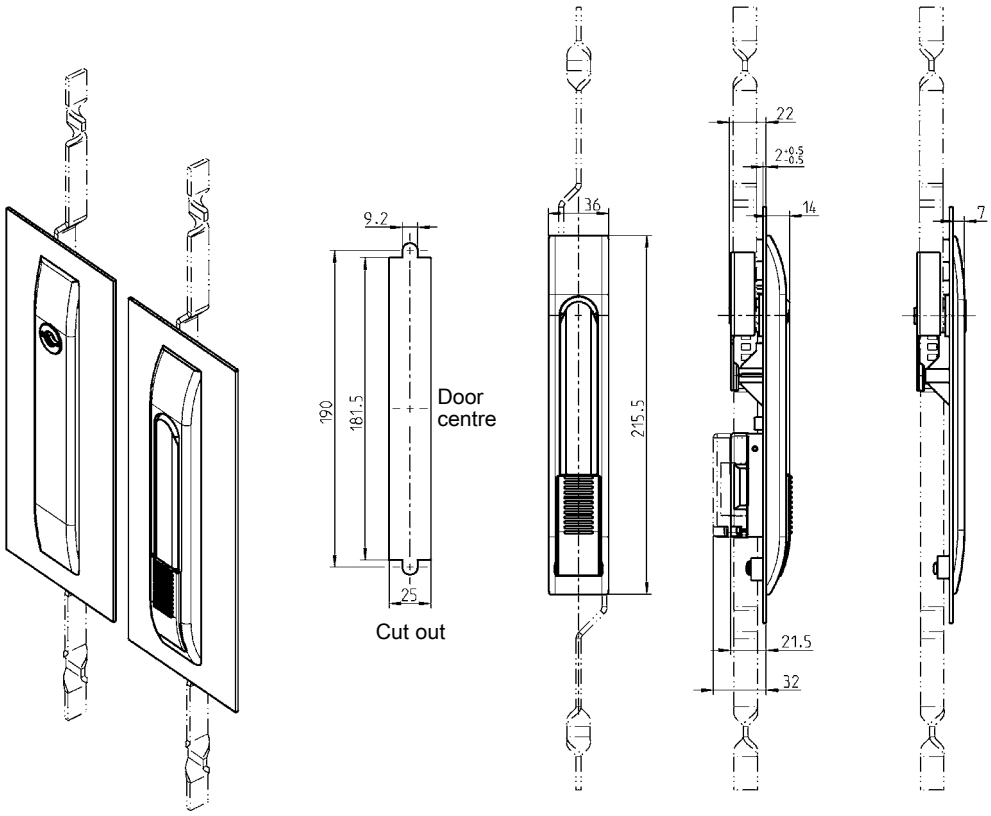

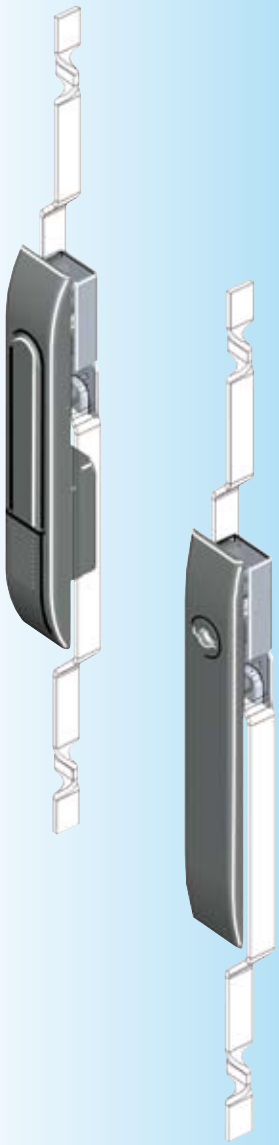

Swinghandle polyamide GF black with push button (2100-U57), handle zinc die black powder coated, shaft zinc die zinc plated, fixing material m.s. zinc plated, with seal	
	1180-U101
Escutcheon polyamide black, insert zinc die chrome plated, fixing material m.s. zinc plated, with seal	
with mask	
Double bit 3	1180-U102
Double bit 5	1180-U103
FIAT	1180-U114
without mask	
Square 6	1180-U104
Square 7	1180-U105
Square 8	1180-U106
Triangular 6,5 CNOMO	1180-U115
Triangular 7	1180-U107
Triangular 8	1180-U108
Square female 8	1180-U113
Daimler Benz	1180-U109
Slot 2x4	1180-U110
Double bit 3	1180-U111
Double bit 5	1180-U112
Eastern Europe Ø 13	1180-U116

Further parts see page

– Key	12B-120
– Locking set	3XA-120
	3XA-240
– Locking set ELM	Chapter 11
– Rod	
outside	3ZA-520

© EMKA Beschlagteile GmbH & Co. KG • 2016 • www.emka.com

Swinghandle 1180 for 3-point-locking system

PROGRAM 1180

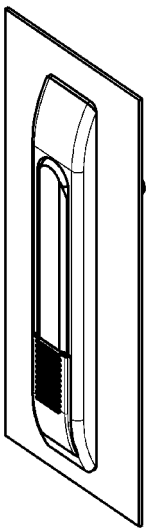

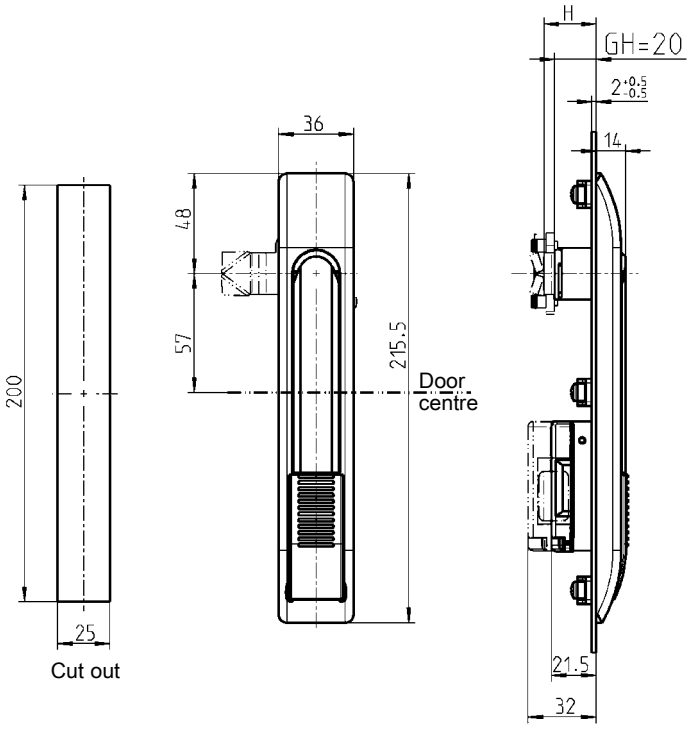

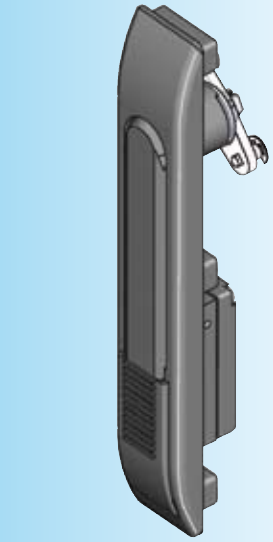

Swinghandle polyamide GF black with push-button (2100-U57), handle zinc die black, powder coated shaft zinc die zinc plated, fixing material m.s. zinc plated, fixing bridges polyamide GF. black, with seal.

	1180-U201

Further parts see page

– Locking set	3XA-120
	3XA-240
– Locking set ELM	Chapter 11
– Cam (GH = 20)	3YC-140

© EMKA Beschlagteile GmbH & Co. KG • 2016 • www.emka.com

EMKA®

Beschlagteile

Swinghandle 1185 for cam or rod control

PROGRAM 1180

A 90° turn with pre-assembeld fixing bridges will secure handle

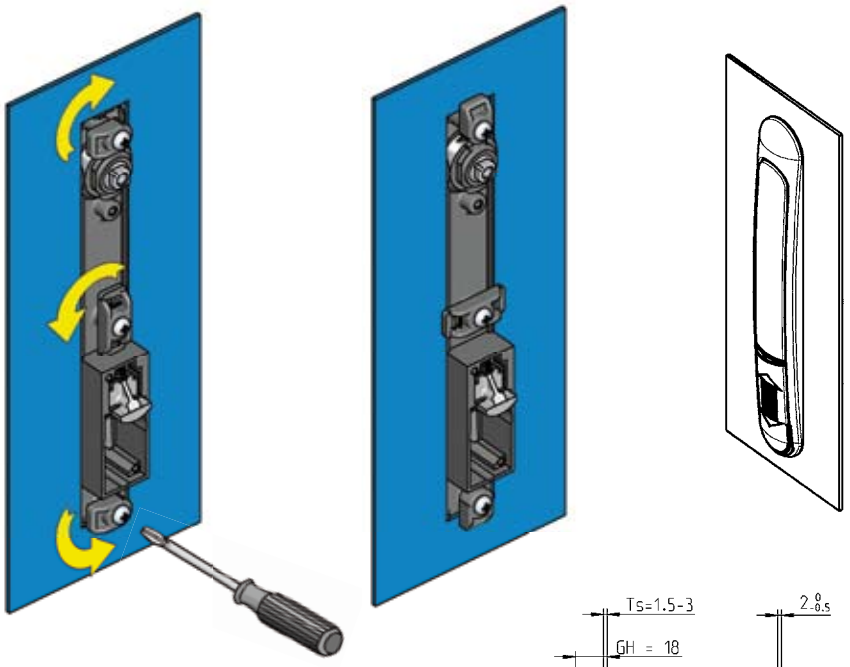

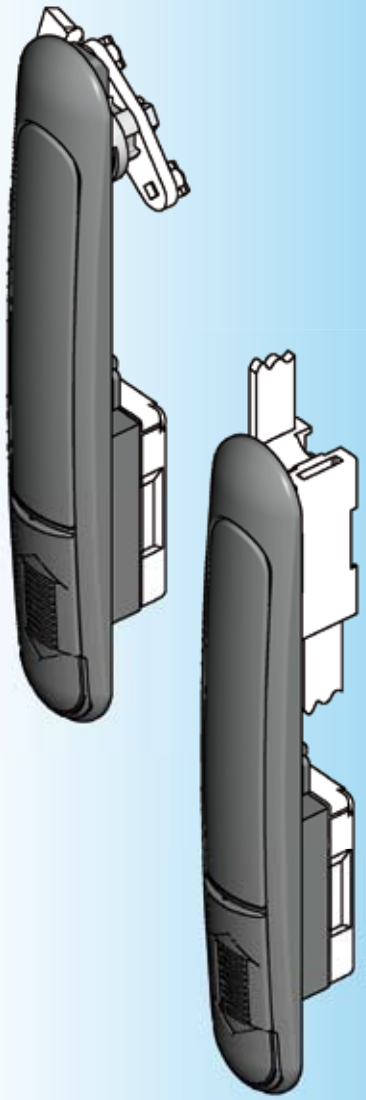

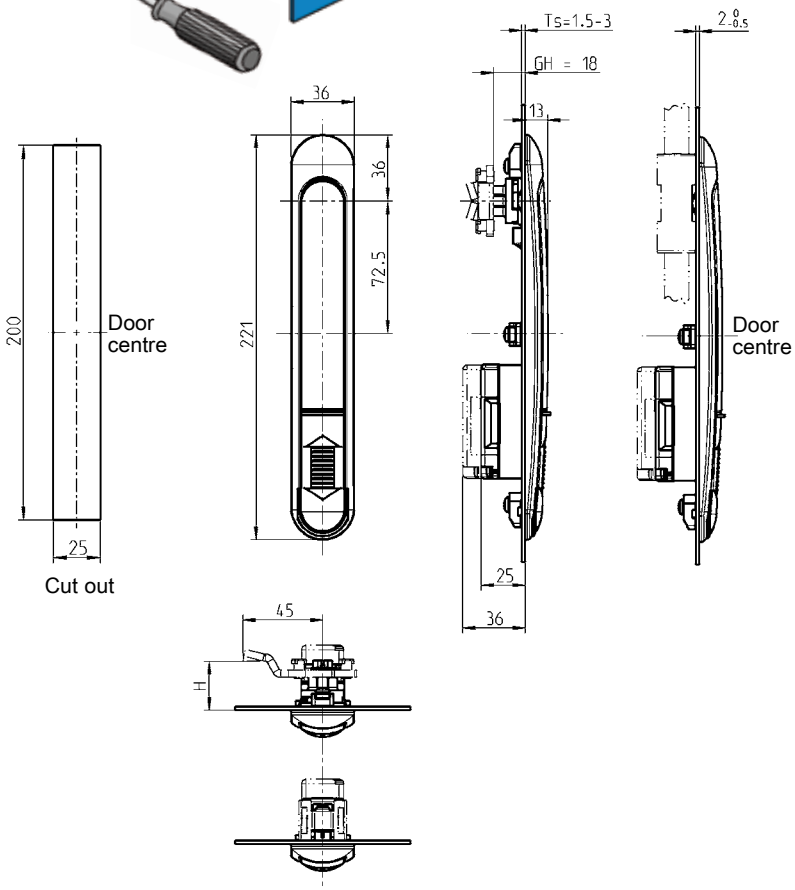

Note:
Swinghandle without locking set

Further parts see page

– Locking set	3XA-120
	3XA-140
– Locking set ELM	Chapter 11
– cam (stroke = 26)	3YC-120
– Rod control	3YA-480

Swinghandle polyamide GF black, shaft zinc die zinc plated, fixing material m.s. zinc plated, with seal	
for cam	1185-U1
for rod control	1185-U2

© EMKA Beschlagteile GmbH & Co. KG • 2016 • www.emka.com

Swinghandle with push button 1185 for cam or rod control

PROGRAM 1180

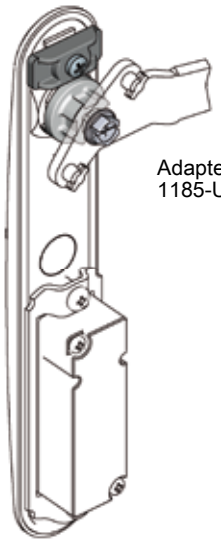

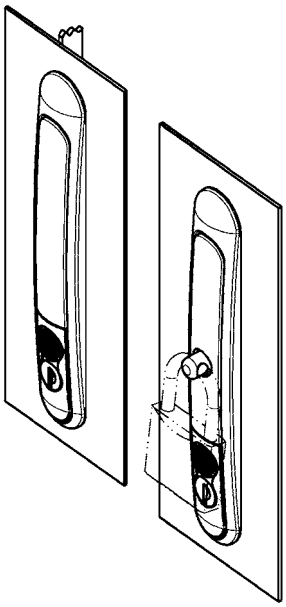

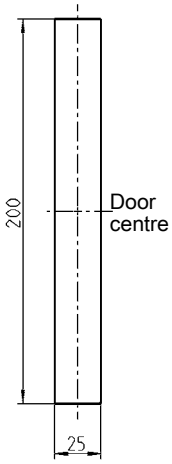

Cut out

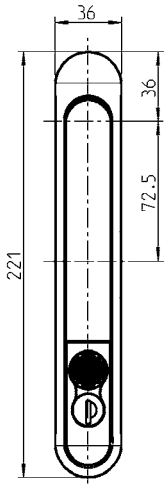

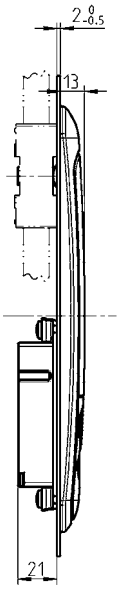

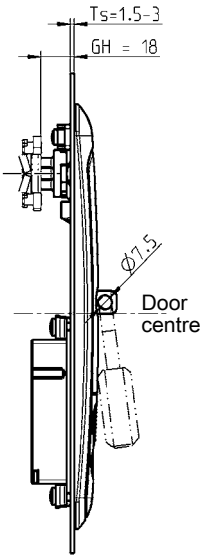

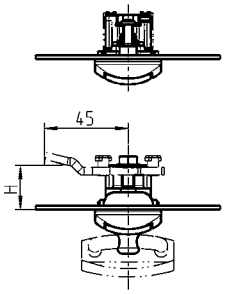

Product benefits

- Use of rod control or cam possible
- Protection against vandalism by recessed operating elements
- Additional locking possible by means of a padlock

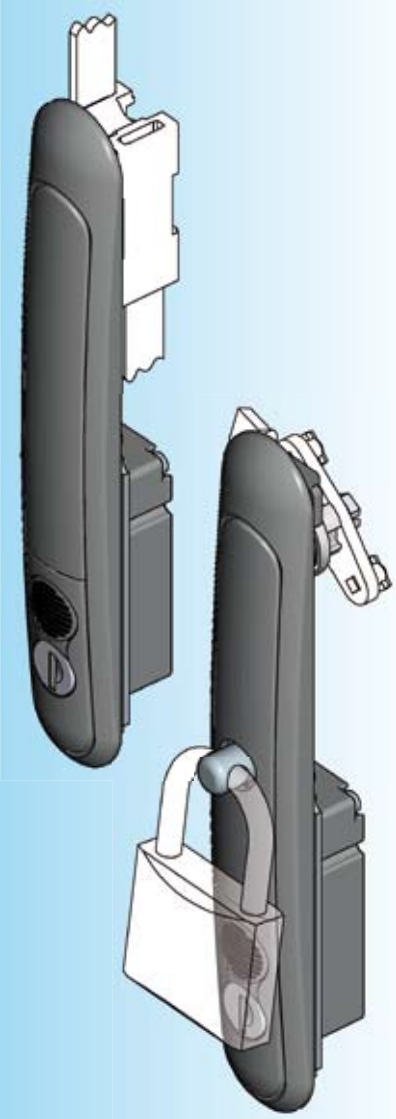

Swinghandle for rod control **Handle, escutcheon and pushbutton zinc die black powder coated;** **padlock stud AISI 303;** **shaft zinc die; round cylinder zinc die with stainless steel cap and dust cap;** **fixing material stainless steel; with seal.** **Each round cylinder has one key m.s. nickel plated.**	
keyed EK 333	1185-U4
keyed different	1185-U4-V
keyed EK 333 and for padlock	1185-U5
different closing and for padlock	1185-U5-V
Adapter for cam zinc die zinc plated; bridge polyamide GF VO black; **with fixing material**	
	1185-U3

Further parts see page
– cam (stroke = 26) 3YC-120
– Rod control 3YA-480

© EMKA Beschlagteile GmbH & Co. KG • 2016 • www.emka.com

Lifthandle and escutcheon
Program 1190

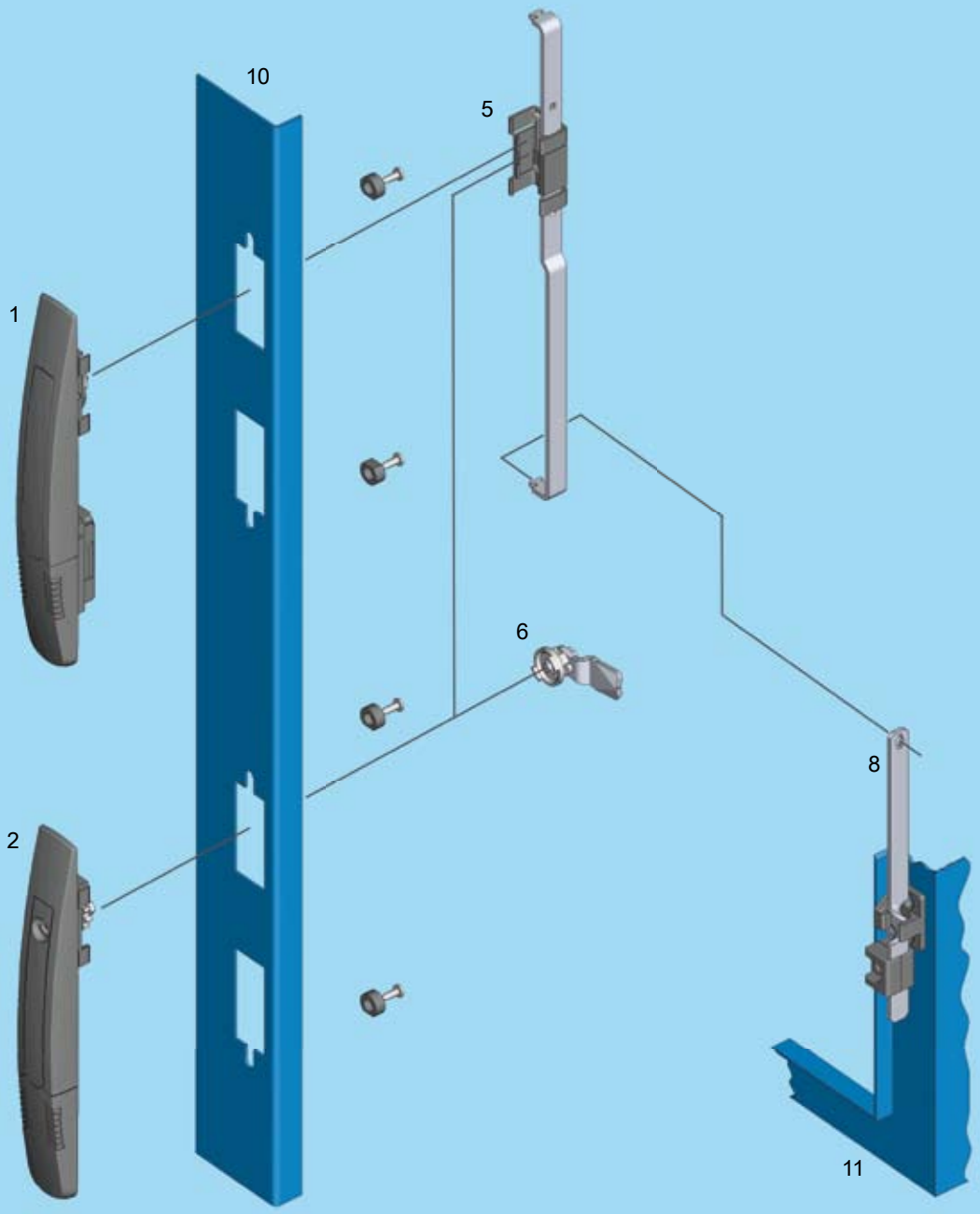

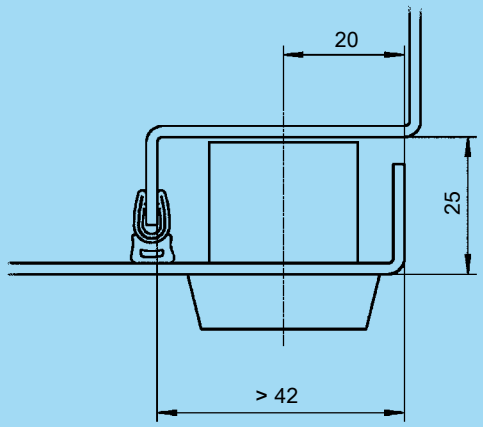

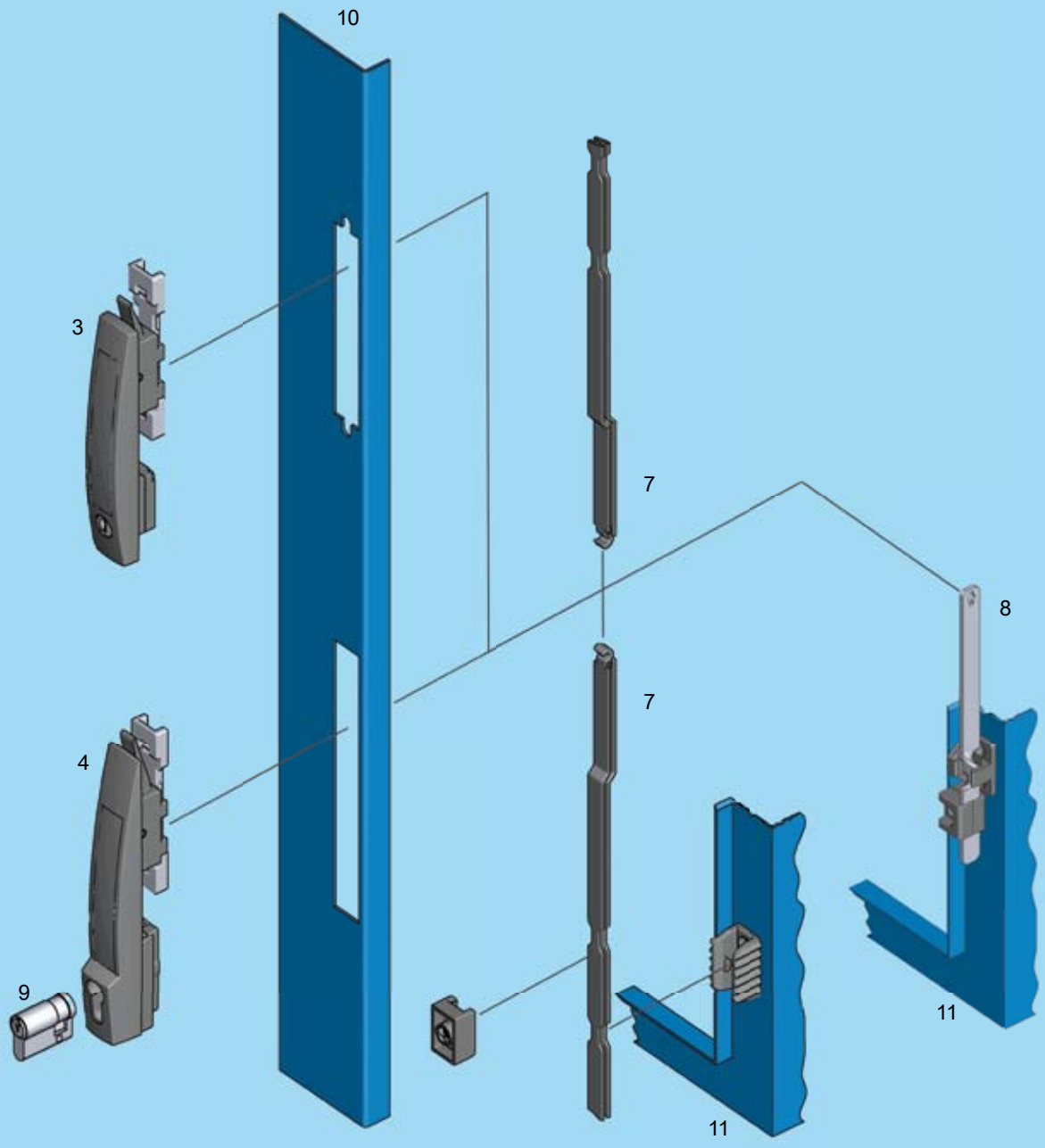

1	Lifthandle	3F-120
2	Escutcheon	3F-220
3	Lifthandle	3F-320, 3F-420
4	Lifthandle	3F-330, 3F-430
5	Rod	
6	Cam	
7	Rod	
8	Rod	
9	Profile half cylinder	
10	Door	
11	Cabinet/frame	

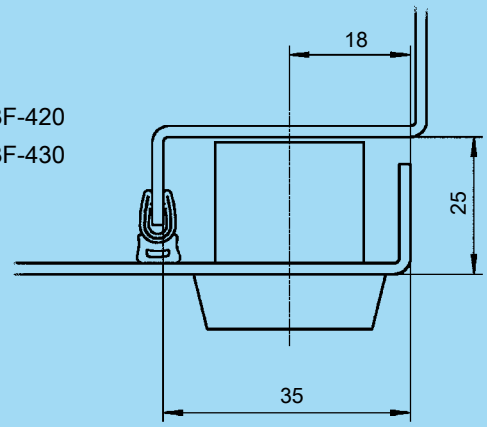

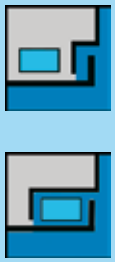

3F-100

EMKA®

Beschlagteile

Lifthandle

PROGRAM 1190

RL IP 40

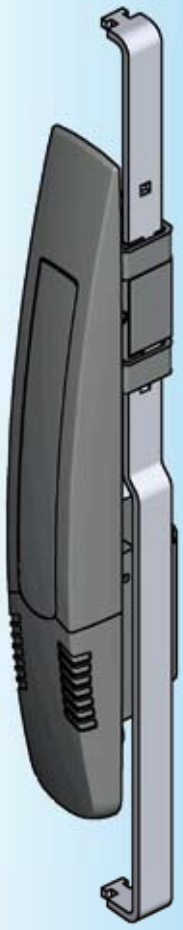

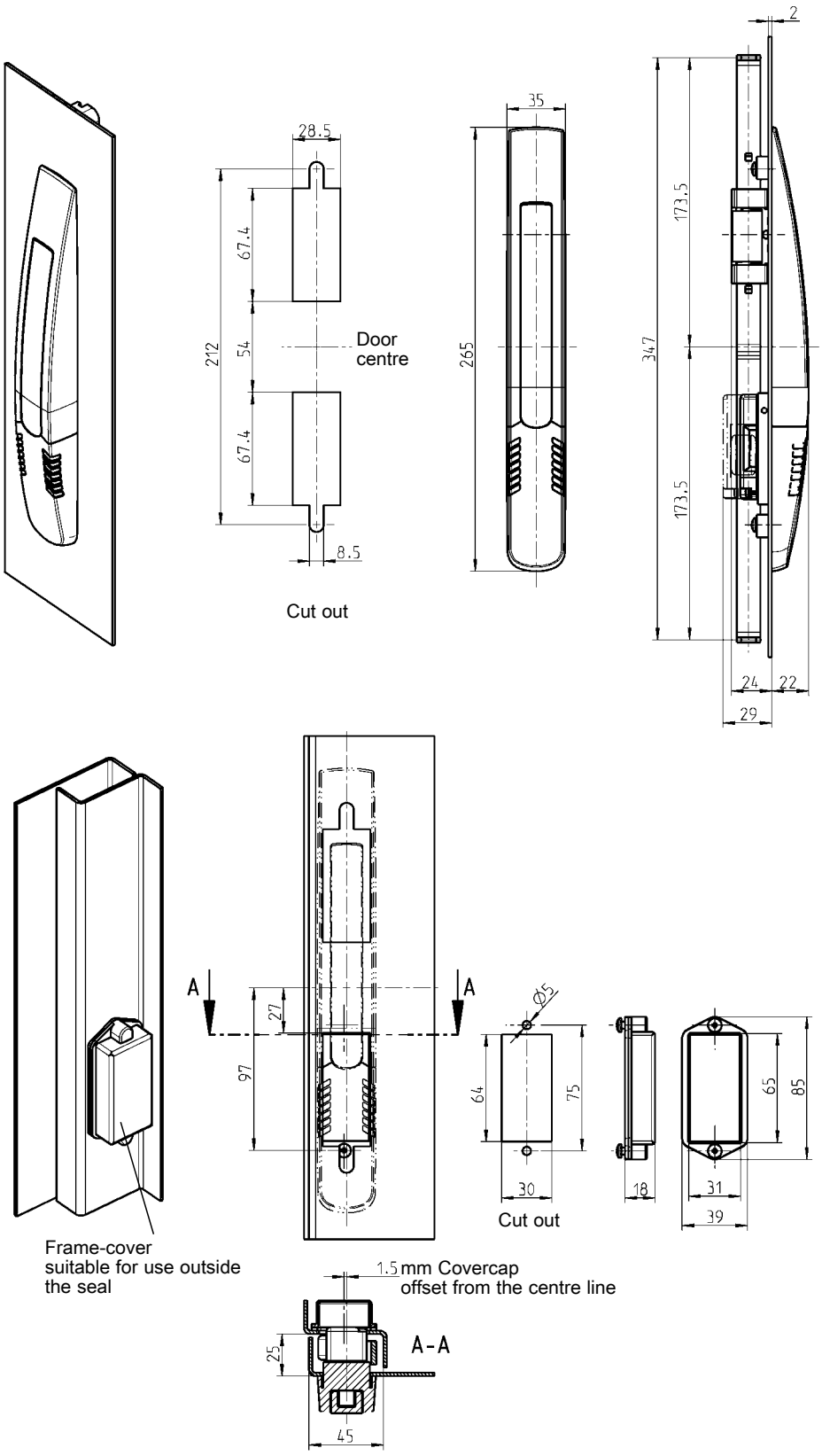

Note:
Frame-cover necessary only for kit see catalogue page 3XA-120

Stroke of rod one direction

Stroke 18 mm

Further parts see page

– Locking set	3XA-120 3XA-240
– Rod	
outside	3ZA-120 3ZA-320

Lifthandle polyamide GF black, flat rod m.s. zinc plated, push button polyamide black, fixing material m.s. zinc plated	
	1190-U1
Frame-cover polyamide GF black, screws m.s. zinc pl., for door LH and RH version, with seal	
	2100-U31

© EMKA Beschlagteile GmbH & Co. KG • 2016 • www.emka.com

Escutcheon

PROGRAM 1190

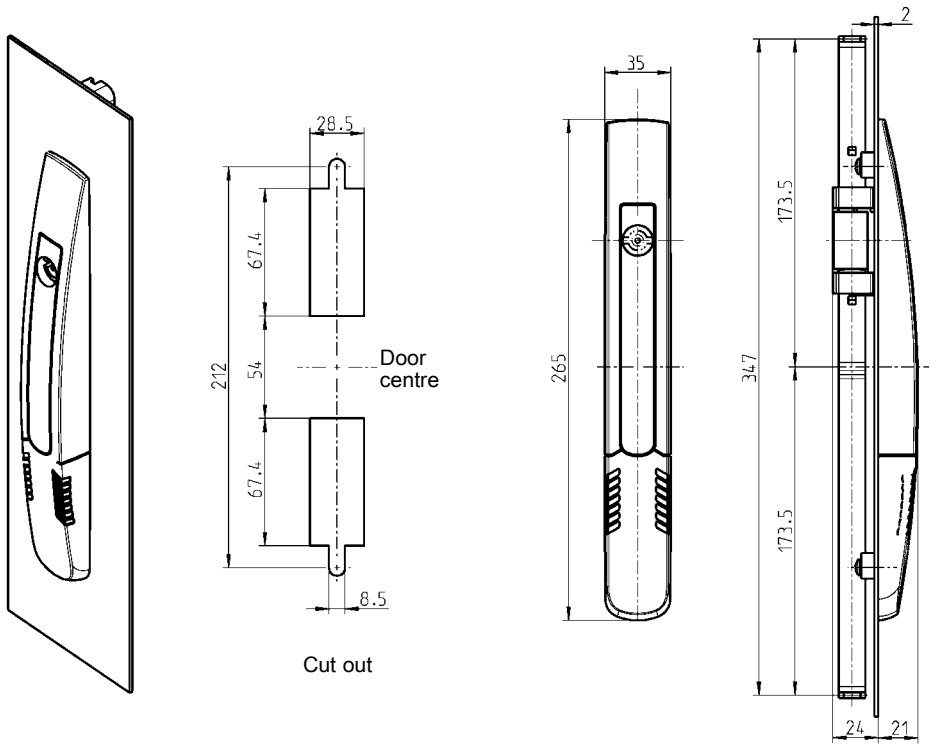

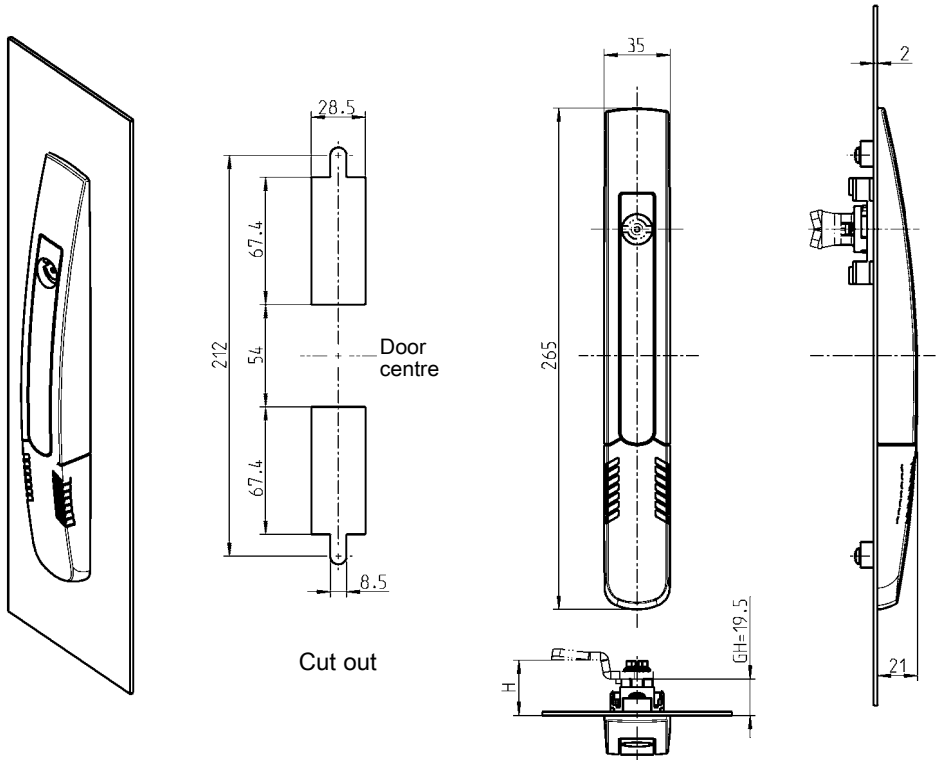

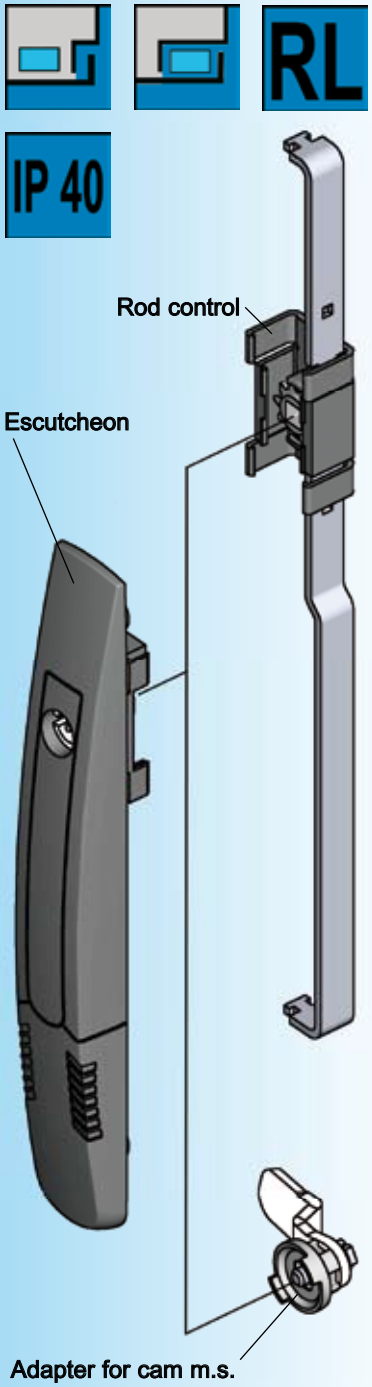

Stroke of rod one direction

Stroke 23,5 mm

Further parts see page
– Rod
outside 3ZA-120
3ZA-320
– Insert 1B-140
– Cam (GH=18) 1C-120
Note:
When using an adapter for cam the H-dimension is 1,5 mm larger

Escutcheon polyamide GF black, fixing material m.s. zinc plated	
	1190-U3
Rod control polyamide GF black, rods m.s. zinc plated	
	1190-U4
Adapter for cam Zinc die m.s. die cast, screw m.s. zinc plated	
	1190-U5

© EMKA Beschlagteile GmbH & Co. KG • 2016 • www.emka.com

EMKA®

Beschlagteile

Lift handle lock

PROGRAM 1190

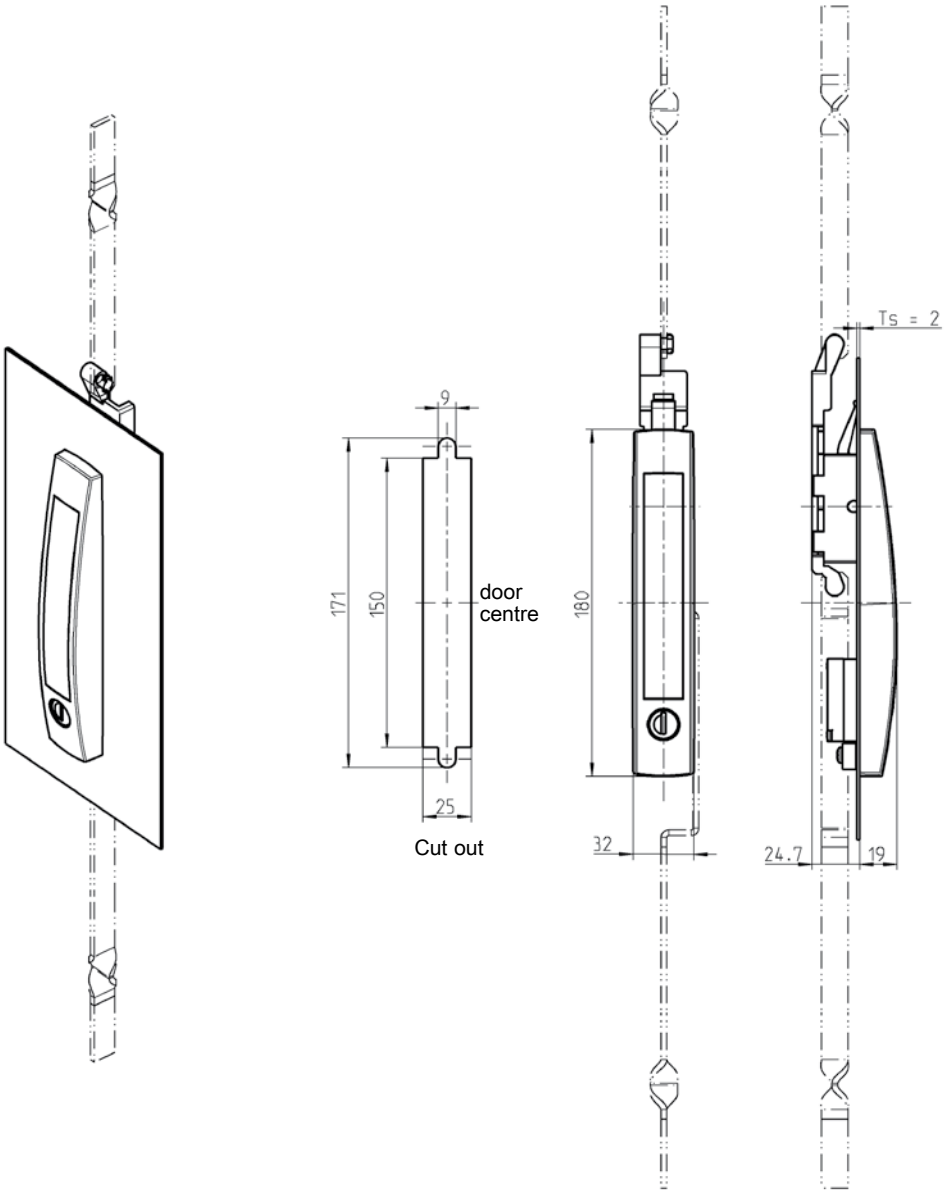

Lift handle polyamide GF black, rod control zinc die, screw m.s. zinc plated, round cylinder with stainless steel cap and dust cap. Each round cylinder has one silver steel key with polyamide grip GF black.	
keyed EK 333	1190-U206
keyed different	1190-U206-V
Insert zinc die chrome plated	
Square 6	1190-U209
Square 7	1190-U210
Square 8	1190-U211
Triangular 6.5 CNOMO	1190-U231
Triangular 7	1190-U212
Triangular 8	1190-U213
Double bit 3	1190-U214
Double bit 5	1190-U215
Daimler Benz	1190-U216
Slot 2x4	1190-U217
Hexagon female SW 8 with pin	1190-U218
Hexagon male SW 11	1190-U219

Rod movement is unidirectional

Stroke 18 mm

Further parts see page
– Rod
outside 3ZA-560

© EMKA Beschlagteile GmbH & Co. KG • 2016 • www.emka.com

Lift handle lock

PROGRAM 1190

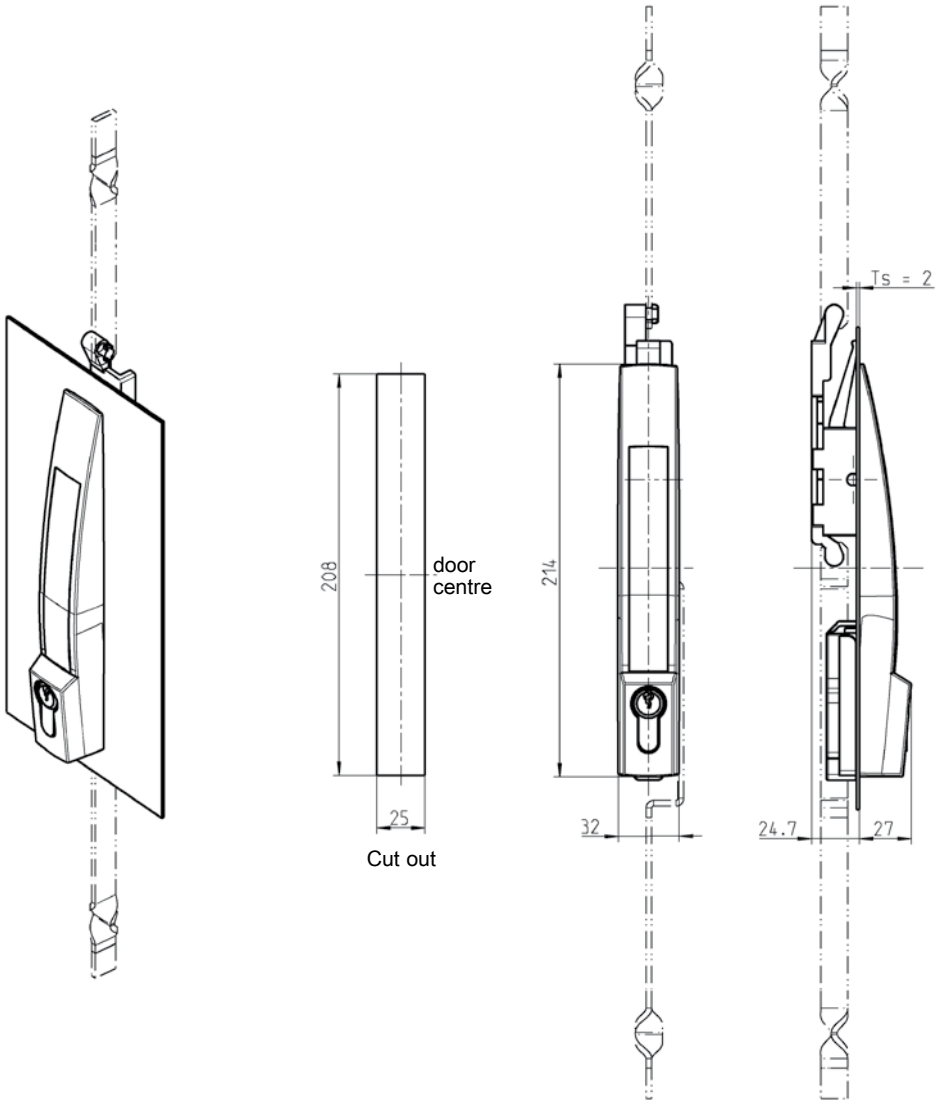

Note:
profile half cylinder 40 mm (A = 30mm),
set cam at 11 o'clock.

Rod movement is unidirectional

Stroke 18 mm

Further parts see page
– Rod
outside 3ZA-560
– Profile half cylinder 3XB-320

Lift handle polyamide GF black,
rod control zinc die, screw m.s. zinc plated

1190-U306

© EMKA Beschlagteile GmbH & Co. KG • 2016 • www.emka.com

Complete lifthandle locking system

PROGRAM 1190

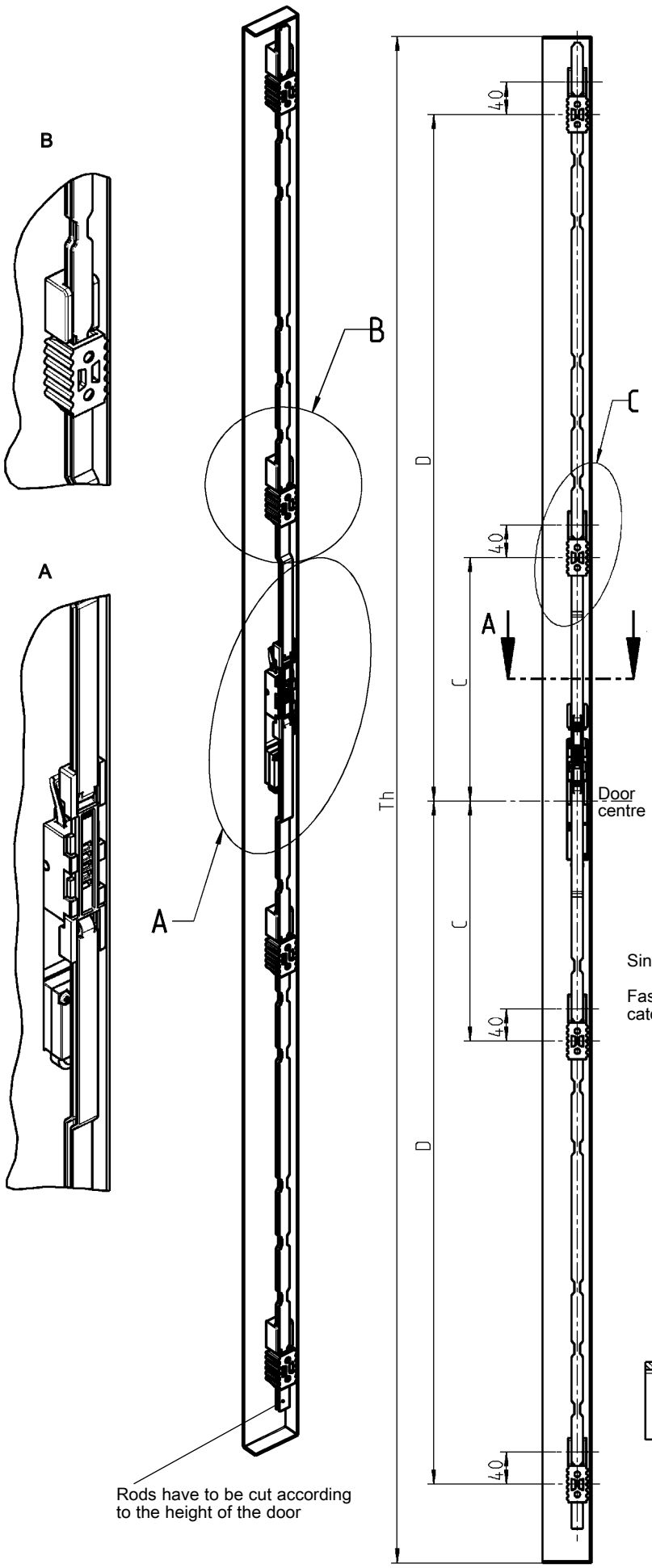

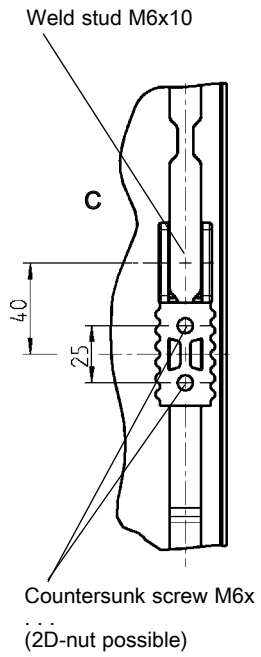

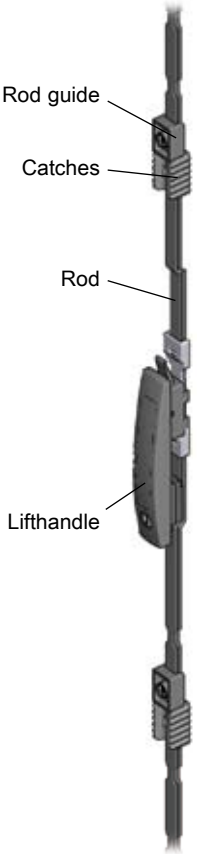

Single direction travel

Fastening material for the rod guides and catches are not part of the delivery kit

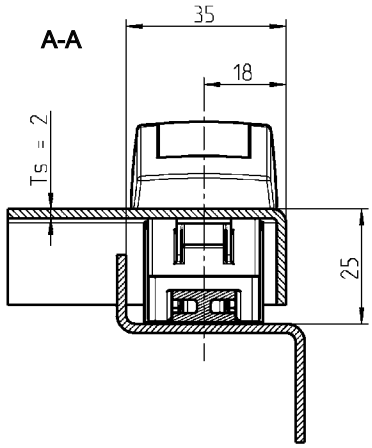

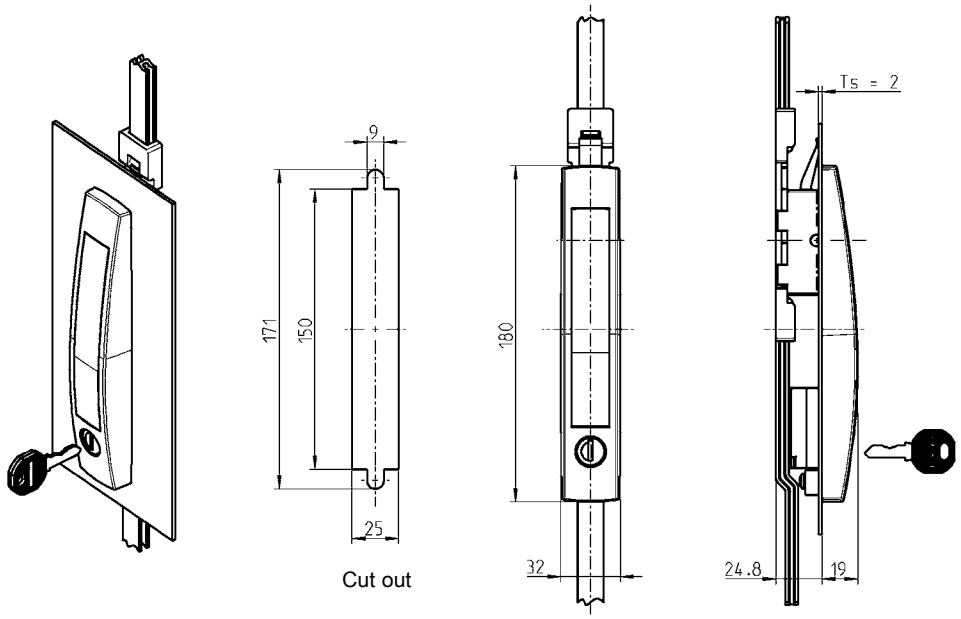

Lifthandle polyamide GF black, rod control zinc die, 2 rods polyamide GF black, number on choice, clip in rod guide plastic black for weld stud M6x10, number on choice, catch polyamide GF black for countersunk screw M6, screw m.s. zinc plated, round cylinder with stainless steel cap and dust protection.
Each round cylinder has one silver steel key with polyamide grip GF black.

Quantity rod guides and catches	2	4
keyed EK 333	1190-U7	1190-U6
keyed different	1190-U7-V	1190-U6-V
Inserts: Chrome plated zinc alloy		
Square 6	1190-U20	1190-U9
Square 7	1190-U21	1190-U10
Square 8	1190-U22	1190-U11
Triangular 6,5 CNOMO	1190-U32	1190-U31
Triangular 7	1190-U23	1190-U12
Triangular 8	1190-U24	1190-U13
Double bit 3	1190-U25	1190-U14
Double bit 5	1190-U26	1190-U15
Daimler Benz	1190-U27	1190-U16
Slot 2x4	1190-U28	1190-U17
Hexagon 8 mm female with pin	1190-U29	1190-U18
Male hexagon 11 mm	1190-U30	1190-U19
Height of the door Th	**Dim. C**	**Dim. D**
800 - 1200	-	300
1200 - 1600	-	450
1600 - 1900	300	700
1900 - 2200	300	850

Stroke 18 mm

Further parts see page
Assembly instruction 3F-440

© EMKA Beschlagteile GmbH & Co. KG • 2016 • www.emka.com

Complete lifthandle locking system

PROGRAM 1190

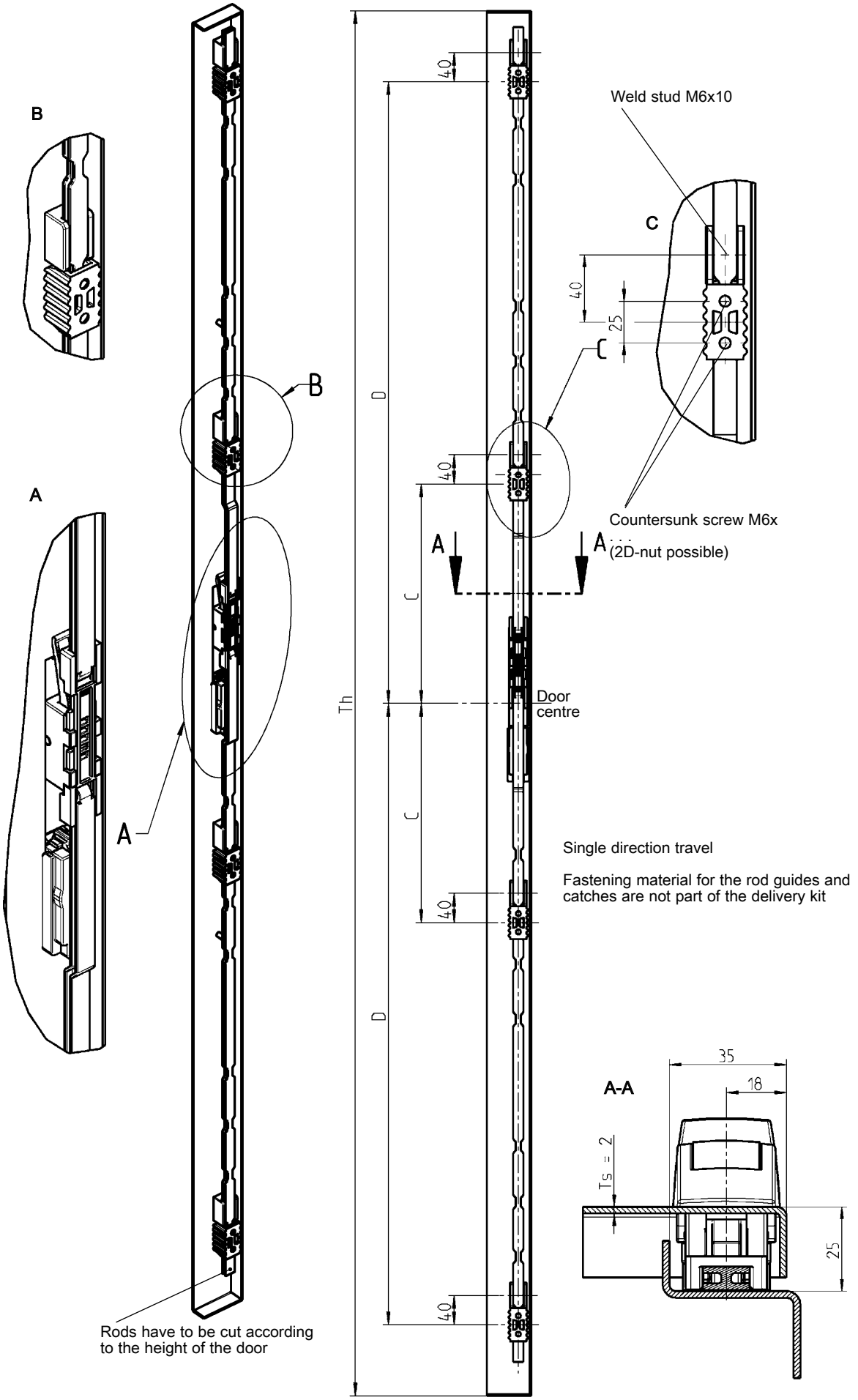

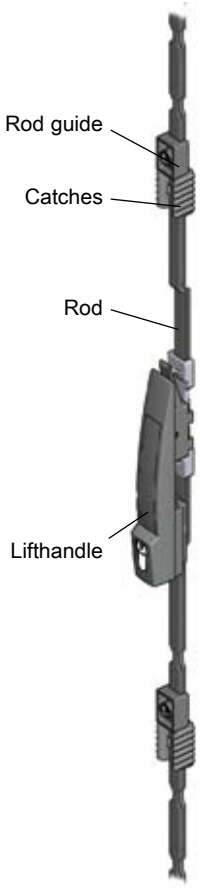

© EMKA Beschlagteile GmbH & Co. KG • 2016 • www.emka.com

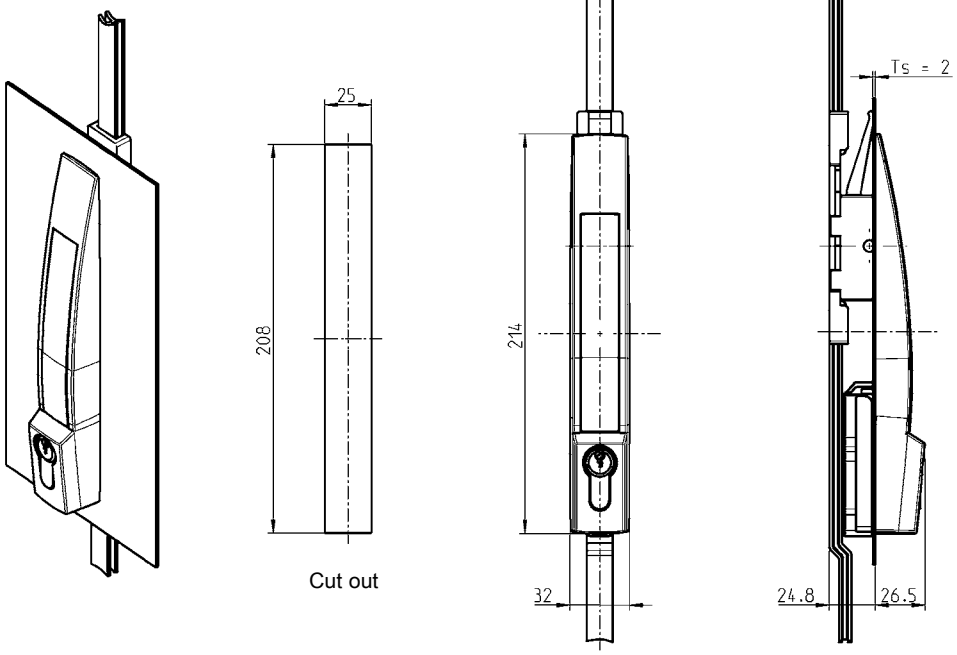

Cut out

Note:
profile half cylinder 40 mm (A = 30 mm),
Set cam at 11 o'clock.

Lifthandle polyamide GF black, rod control zinc die, 2 rods polyamide GF black, number on choice, clip-in rod guide plastic black for weld stud M6x10, number on choice, catch polyamide GF black for countersunk screw M6, screw m.s. zinc plated		
Quantity rod guides and catches	2	4
	1190-U107	1190-U106
Height of the door Th	Dim. C	Dim. D
800 - 1200	-	300
1200 - 1600	-	450
1600 - 1900	300	700
1900 - 2200	300	850

Stroke 18 mm

Further parts see page
– Assembly instruction 3F-440
Profile half cylinder 3XB-320

© EMKA Beschlagteile GmbH & Co. KG • 2016 • www.emka.com

EMKA Beschlagteile

®Installation instructions: Lifthandle locking systems

PROGRAM 1190

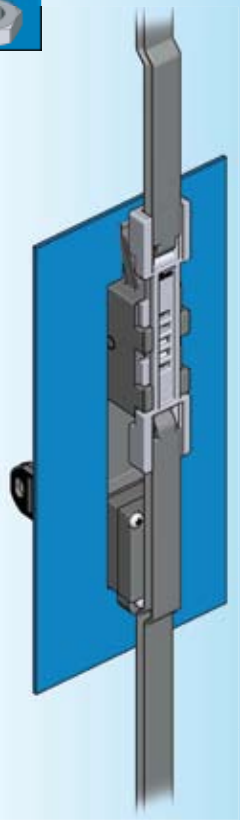

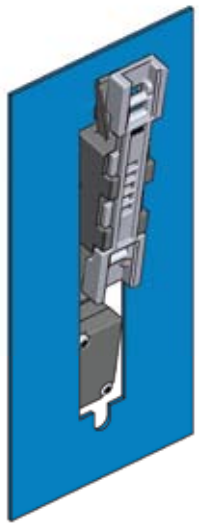

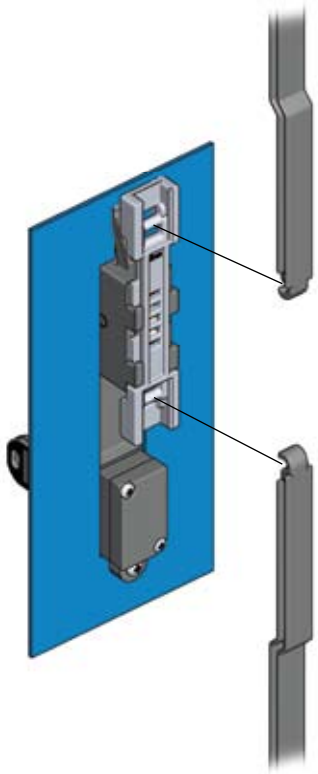

– Insert lifthandle through cut-out

– Fastening of the handle by use of the plastic washer and screw

– Rod guides to be slid on to the rods

– Clip-in the rods

Rod guide with rod pictured transparent

Pull-out force: $F_{min.}$ = 350 N
Application force: Typical factor F ≈ 135 N

These factors refer to a thread with surface raw or zinc plated and degreased.

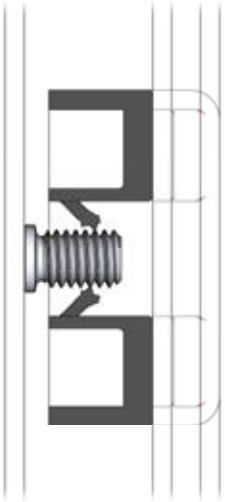

Rod guide can be pre-assembled on rod

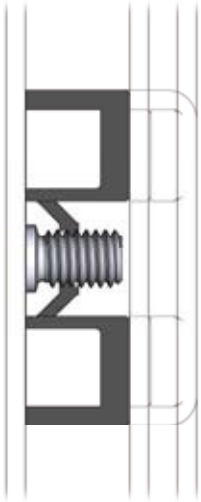

Rod guide pre-assembled

Further parts see page
– Further parts 3F-420
3F-430

© EMKA Beschlagteile GmbH & Co. KG • 2016 • www.emka.com

Lift handle for small clearance Program 1390

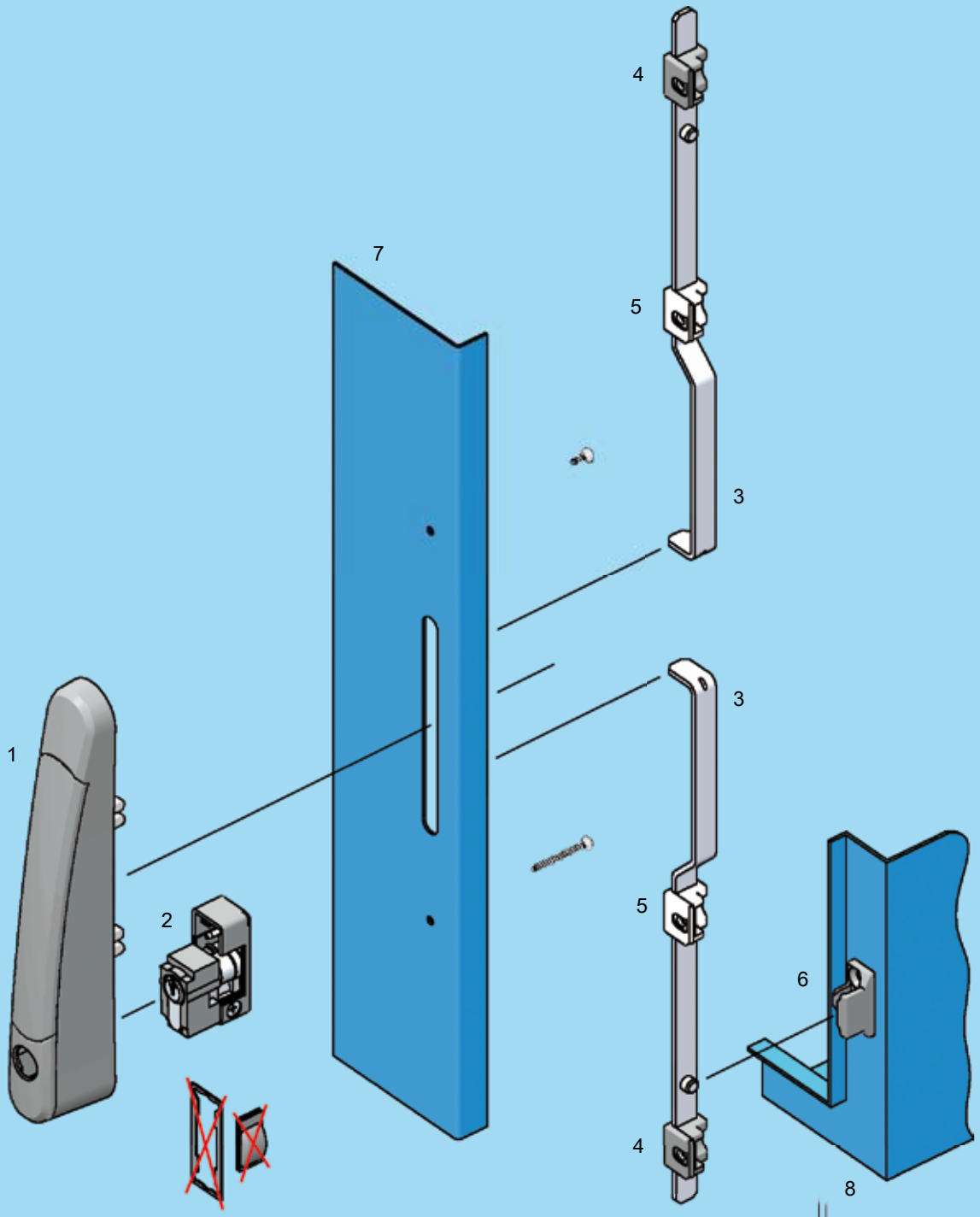

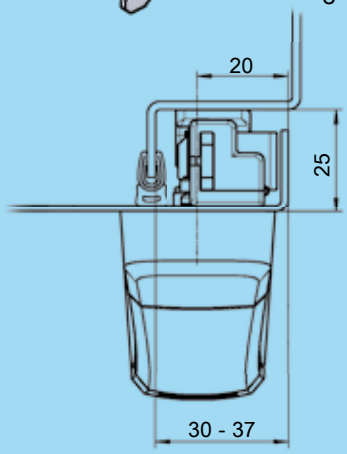

1	Lifthandle	3FA-120
2	Locking set	
3	Rod (outside the gasketing)	
4	Rod guide	
5	Rod guide (necessary up to door height 1600)	
6	Catches	
7	Door	
8	Cabinet/frame	

3FA-100

Lifthandle for small clearance

PROGRAM 1390

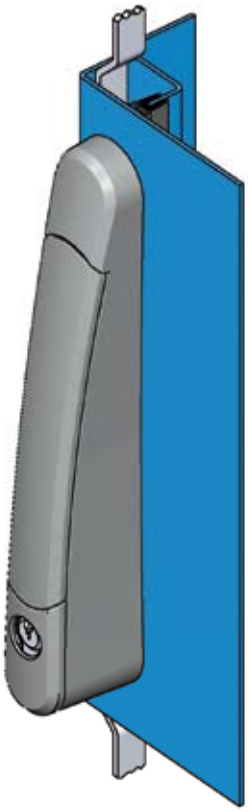

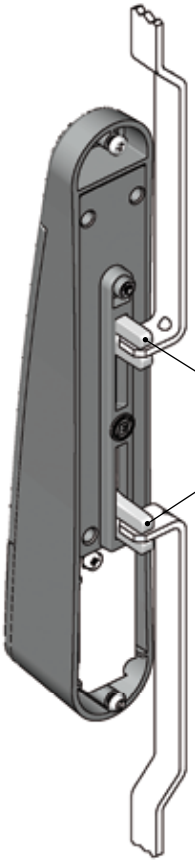

Product benefits

- two-directional lifthandle
- variable positioning of rod controls matching hinge fixing
- small cut out due to outside handle mechanism
- innovative new low-priced technology
- attractive design
- makes small clearance possible 33 x 25 mm or 37 x 25 mm
- patented!

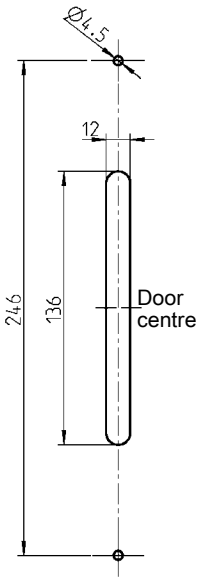

Cut out

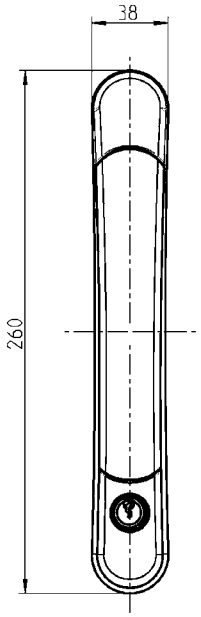

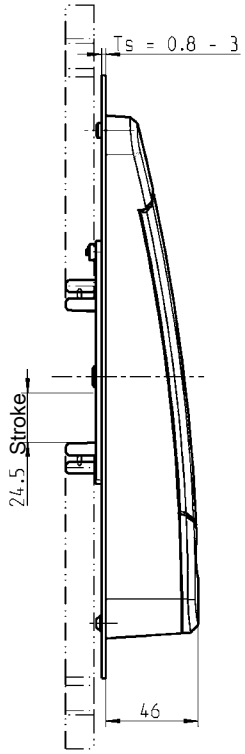

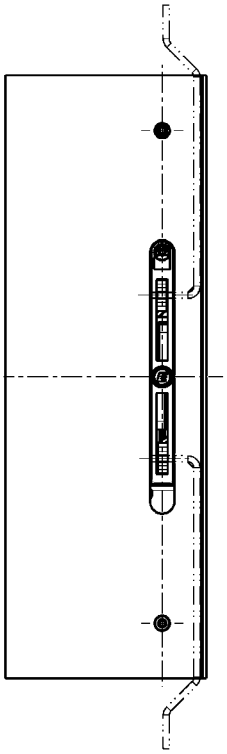

* The values in the table for dimension A with seal refer to seal 1011-10.
Other seals lead to other values for dimension A.

** Dimension B should have the same value as the fixing dimension of the frame part if the door is to be used right or left.

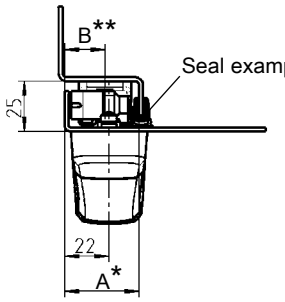

Locking type (see right)	Dimension A	
	without seal	with seal*
1	30	33
2	30	33
3	33	37

© EMKA Beschlagteile GmbH & Co. KG • 2016 • www.emka.com

RL

Note for locking set with profile half cylinder

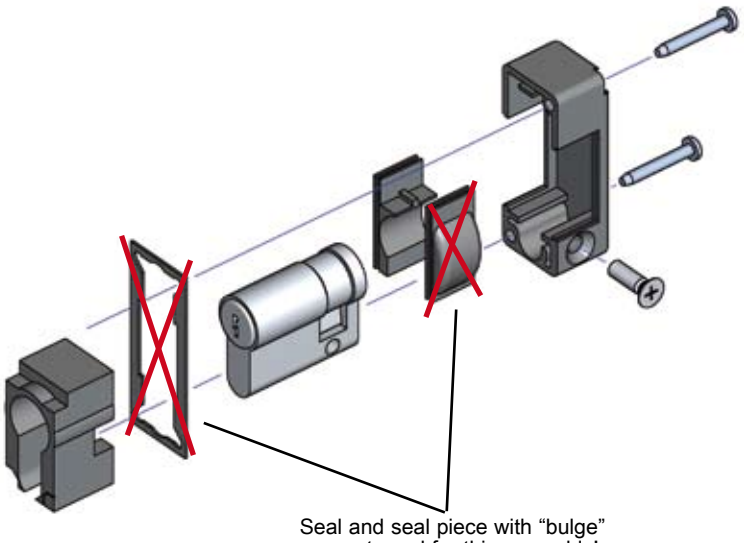

Seal and seal piece with “bulge” are not used for this assembly!

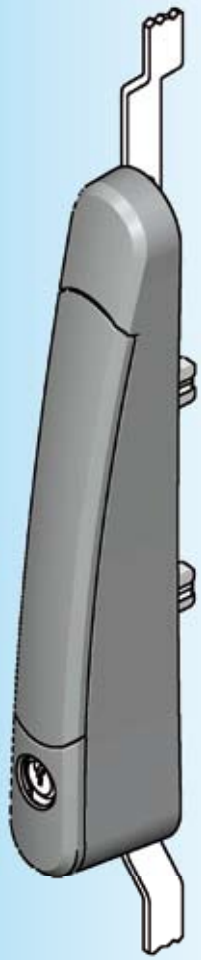

Locking types

1

Rod with cut out

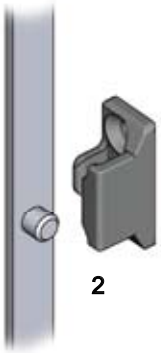

2

Rod with single roller

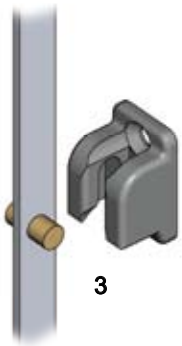

3

Rod with double roller

Stroke of rods is bi-directional

Note: dimension B depending on the hinge used

Attention:
Locking set for ASSA cylinder, KABA cylinder and push button cannot be installed!

Further parts see page

– Locking set	3XA-120
	3XA-140
– Rods	3ZA-610

Lifthandle polyamide GF black;
rack zinc-die;
fixing material m.s. zinc plated;
with spring

1390-U1

© EMKA Beschlagteile GmbH & Co. KG • 2016 • www.emka.com

EMKA®

Beschlagteile

Notes:

Swinghandle and escutcheon Program 1225

For the items 1 and 3 the articles of Program 1325 can be used alternatively.
See page from 3BA-100

1	Escutcheon 1221 with insert	3G-120
2	Escutcheon 1223 with handle	3G-180
3	Swinghandle	3G-220, 3G-420, 3G-520
4	Swinghandle (double cylinder)	3G-320
5	Rod control	
6	Bearing bush	
7	Cam	
8	Rod (inside the gasketing)	
9	Rod (outside the gasketing)	
10	Earthing device	
11	Profile half cylinder	
12	Door	
13	Cabinet/frame	

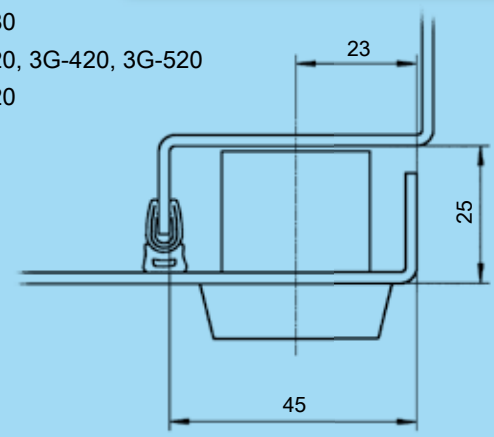

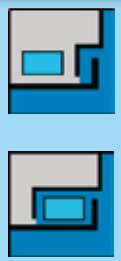

EMKA®

Beschlagteile

Escutcheon 1221 with insert

PROGRAM 1225

Escutcheon, long

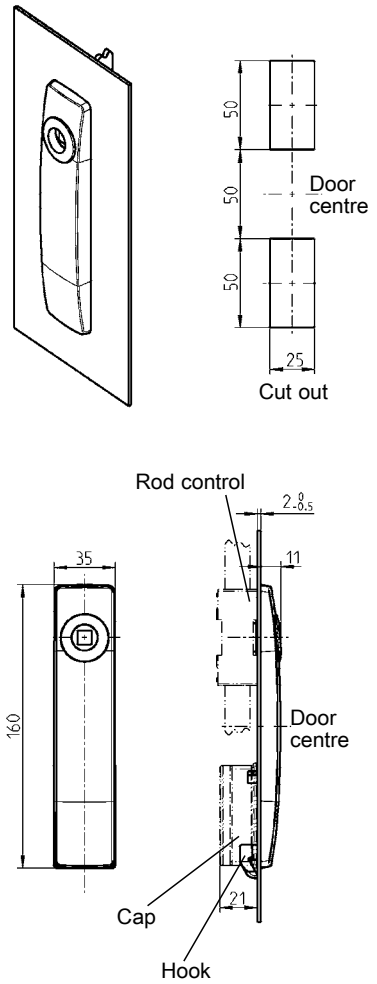

Escutcheon, short

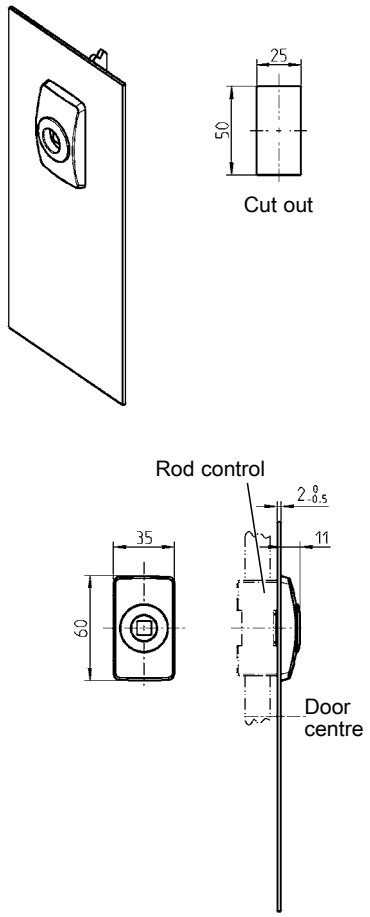

Escutcheon long polyamide GF black, screw m.s. zinc plated, with seal			Escutcheon short polyamide GF black, screws m.s. zinc pl., with seal IP 65
	hook IP 40	screw on cap IP 65	
for square, triangular			
Daimler-Benz, slot	1221-U19	1221-U133	1221-U22
for double bit	1221-U20	1221-U134	1221-U23
for railroad square 9	1221-U19A	1221-U135	1221-U22A

Insert, zinc die chrome plated, fixing material m.s. zinc plated			
Square 6	1121-U11	Double bit 3*	1121-U16
Square 7	1121-U12	Double bit 5*	1121-U17
Square 8	1121-U13	Square female 8	1121-U167
Triangular 6,5 CNOMO	1121-U169	Slot 2 x 4	1121-U123
Triangular 7	1121-U14	Railroad square 9	1121-U72
Triangular 8	1121-U15	Daimler Benz	1121-U18

* in Polyamide on request

Further parts see page
- Key 12B-120
- Rod control for long version 3YA-110, 3YA-120, 3YA-140, (only with hook) 3YA-190
  Short version 3YA-115, 3YA-160
- Bearing bush 3YB-120

Accessories

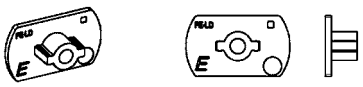

Transport safety device polyamide GF black for double bit insert

1121-32

© EMKA Beschlagteile GmbH & Co. KG • 2016 • www.emka.com

Escutcheon 1223 with handle

PROGRAM 1225

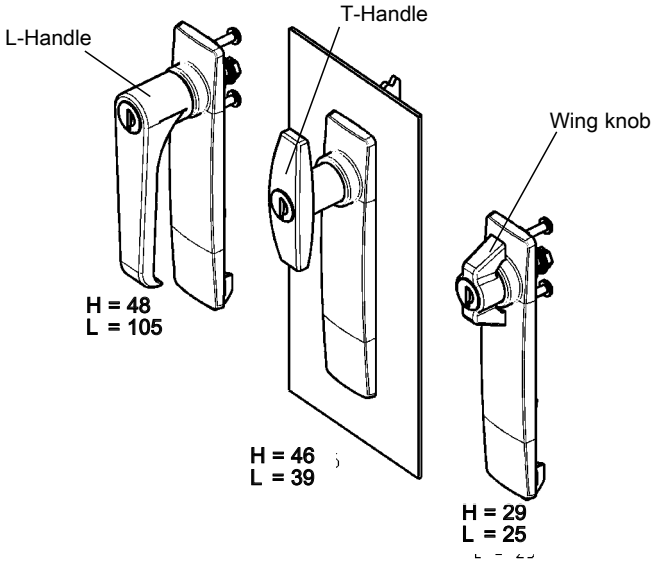

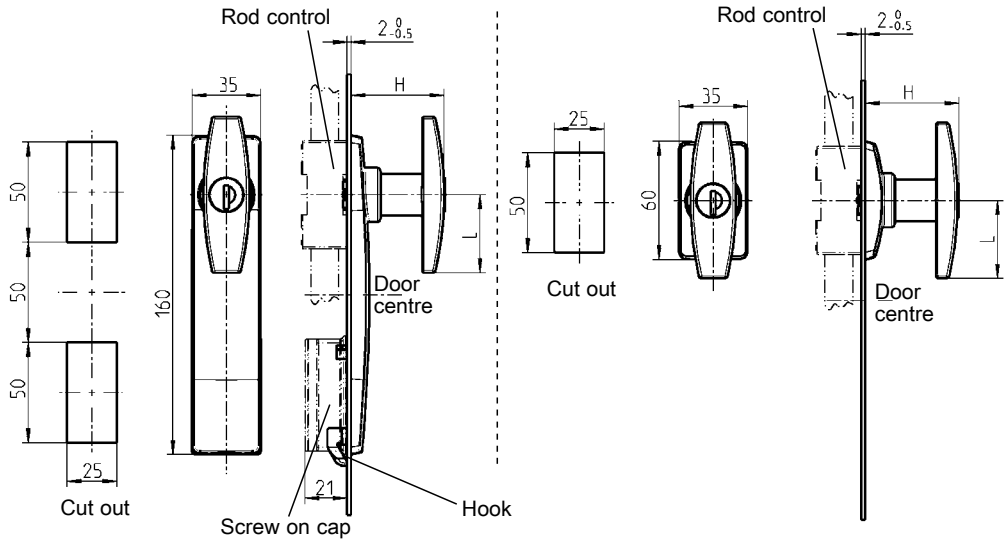

Each round cylinder has one silver steel key with polyamide grip GF black.

Escutcheon polyamide GF black, round cylinder with stainless steel cap and shutter, fixing material m.s. zinc plated, with seal	Escutcheon long		Escutcheon
	hook IP 40	screw on cap IP 65	short IP 65
Wing knob zinc die black powder coated			
non locking	1223-U1	1223-U25	1223-U4
keyed EK 333	1223-U2	1223-U26	1223-U5
keyed different	1223-U3	1223-U27	1223-U6
T-Handle zinc die black powder coated			
non locking	1223-U7	1223-U28	1223-U10
keyed EK 333	1223-U8	1223-U29	1223-U11
keyed different	1223-U9	1223-U30	1223-U12
prepared for KABA 1036	1223-U21	–	1223-U22
L-Handle zinc die black powder coated			
non locking	1223-U13	1223-U31	1223-U16
keyed EK 333	1223-U14	1223-U32	1223-U17
keyed different	1223-U15	1223-U33	1223-U18
prepared for KABA 1036	1223-U19	–	1223-U20

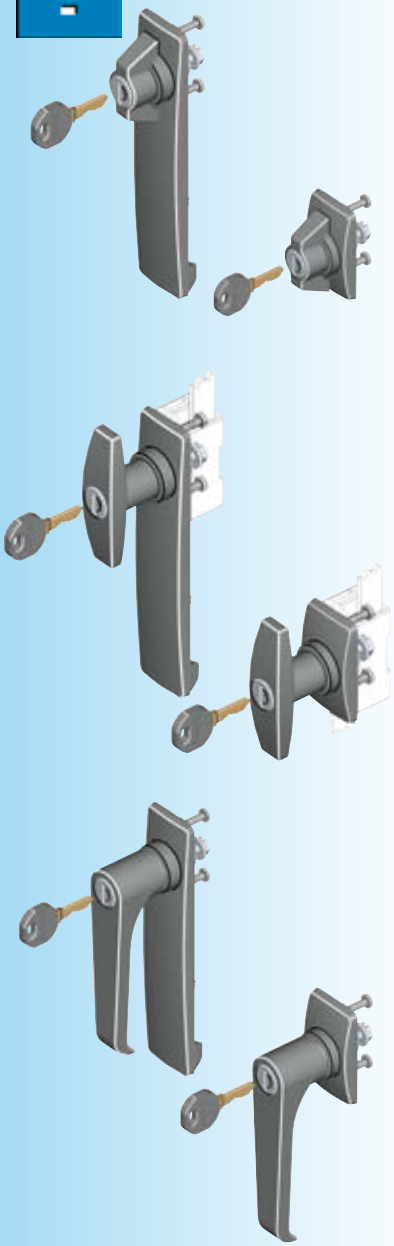

Further parts see page

- Key 12B-120
- Spare key 12B-140
- Rod control for long version 3YA-110, 3YA-120, 3YA-140, (only with hook) 3YA-190
  Short version 3YA-115, 3YA-160
- Bearing bush 3YB-120
- Dust cap for T-Handle 1C-340

© EMKA Beschlagteile GmbH & Co. KG • 2016 • www.emka.com

Swinghandle

PROGRAM 1225

Example:
*(22/24 mm)
- Dimension with dust cap
- Dimension without dust cap

Swinghandle for profile half cylinder, polyamide GF black, shaft zinc die zinc plated, fixing material m.s. zinc plated, with seal				
	screw on cap IP 65		hook IP 40	
	with	without	with	without
	sliding dust cover		sliding dust cover	
for 40 mm half cylinder *(22/24 mm)	1225-U191	1225-U190	1225-U186	1225-U185
for 40 mm half cylinder *(22/24 mm) lead-sealable	1225-U191-01	-	1225-U186-01	-
for 45 mm half cylinder *(28/30 mm)	1225-U196	1225-U195	1225-U194	1225-U193
with cylinder (Berlin version)	-	-	1225-U276	1225-U275
Swinghandle for profile half cylinder polyamide GF black, handle zinc die black powder coated, shaft zinc die zinc plated, fixing material m.s. zinc plated, with seal				
for 40 mm half cylinder *(22/24 mm)	-	1225-U190-01	-	1225-U185-01
Swinghandle polyamide GF black with EMC-shielding for profile half cylinder, shaft zinc die zinc plated, fixing material m.s. zinc plated, with seal				
for 40 mm half cylinder *(22/24 mm)	1225-U191-E	-	-	-

Swinghandle polyamide GF black with round cylinder including stainless steel cap and dust cap or insert zinc die chrome plated, shaft zinc die zinc plated, fixing material m.s. zinc plated, with seal. Each round cylinder has one silver steel key with polyamide grip GF black.				
	screw on cap		hook	
	with	without	with	without
	sliding dust cap		sliding dust cap	
Round cylinder keyed EK 333	1225-U206	1225-U202	on request	1225-U268
Round cylinder keyed different	1225-U207	1225-U203	on request	1225-U269
Square 6 [1]	1225-U242	1225-U210	on request	on request
Square 7 [1) 2)]	1225-U243	1225-U211	on request	on request
Square 8 [1) 2)]	1225-U244	1225-U212	on request	on request
Square 8 slotted	1225-U245	1225-U213	on request	on request
Triangular 6,5 CNOMO	1225-U246	1225-U214	1225-U201	1225-U200
Triangular 7 [1]	1225-U247	1225-U215	on request	on request
Triangular 8 [1) 2)]	1225-U248	1225-U216	on request	on request
Double bit 3	1225-U249	1225-U236	on request	on request
Double bit 5	1225-U250	1225-U239	on request	on request
Hexagon female 10	1225-U251	1225-U219	on request	on request
Female Square 6	1225-U252	1225-U220	on request	on request
Square female 8	1225-U253	1225-U221	on request	on request
Daimler Benz	1225-U254	1225-U222	on request	on request
Slot 1,2 x 3	on request	on request	on request	on request
Slot 2 x 4 [1) 2)]	1225-U256	1225-U224	on request	on request
Crown type	1225-U257	1225-U225	on request	on request
Eastern Europe Ø 13	1225-U282	1225-U283	on request	on request
Prepared for padlock and profile cylinder	-	1225-U184	-	on request

© EMKA Beschlagteile GmbH & Co. KG • 2016 • www.emka.com

Swinghandle for profile half cylinder

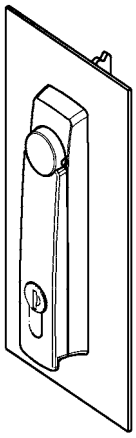

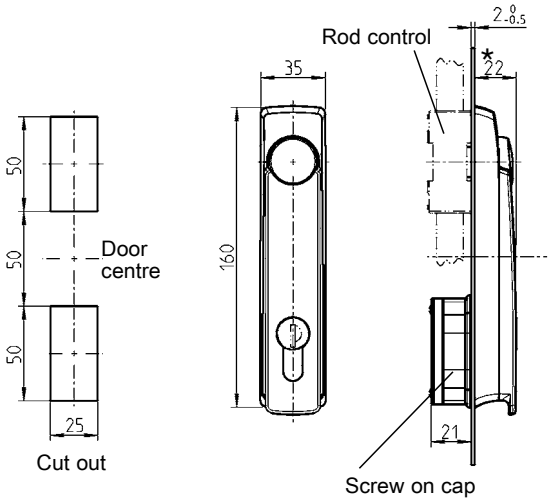

Swinghandle with sliding dust cover

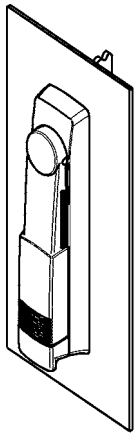

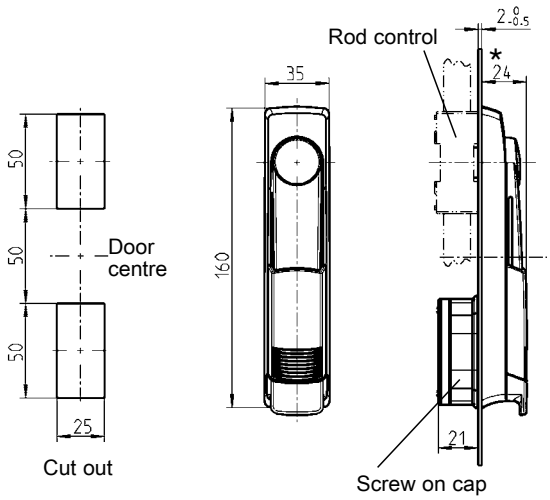

Swinghandle with round cylinder or insert

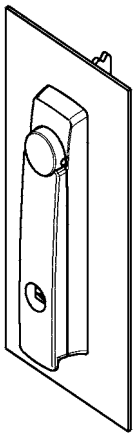

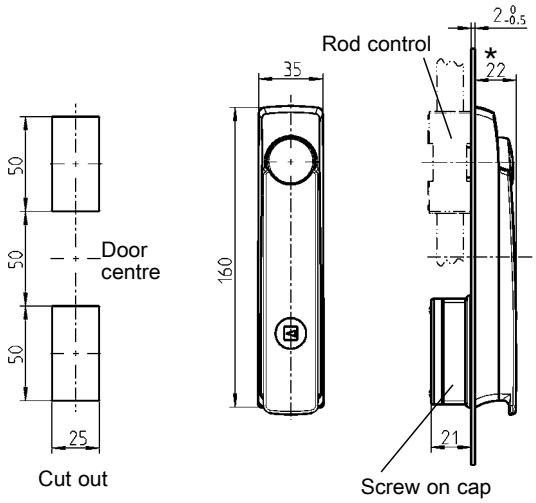

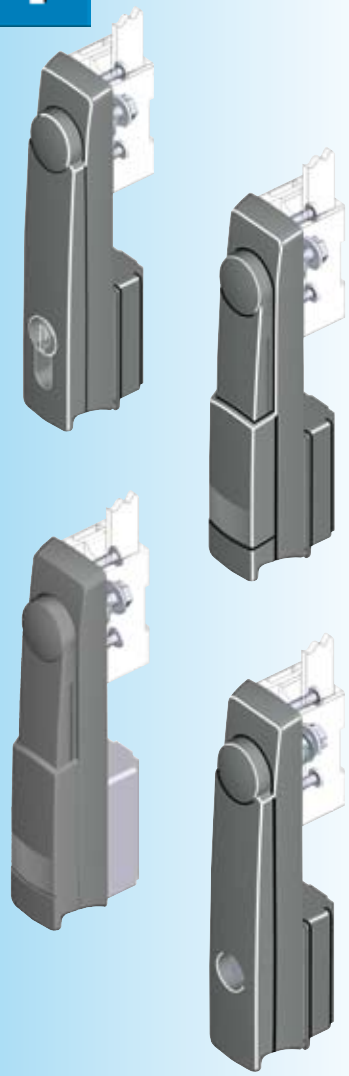

Further parts see page

– Key	11B-120
– Rod control	3YA-110
	3YA-120
	3YA-140
(only with hook)	3YA-190
– Bearing bush	3YB-120
– Profile half cylinder	3XB-120

On request:
Insert in
1) Zinc die black p.c.
2) polyamide black
– Cap without foamed seal for small bending area
– EMC-version
– Swinghandle lead-sealable
– Handle in zinc die

© EMKA Beschlagteile GmbH & Co. KG • 2016 • www.emka.com

EMKA®

Beschlagteile

Double cylinder-swinghandle

PROGRAM 1225

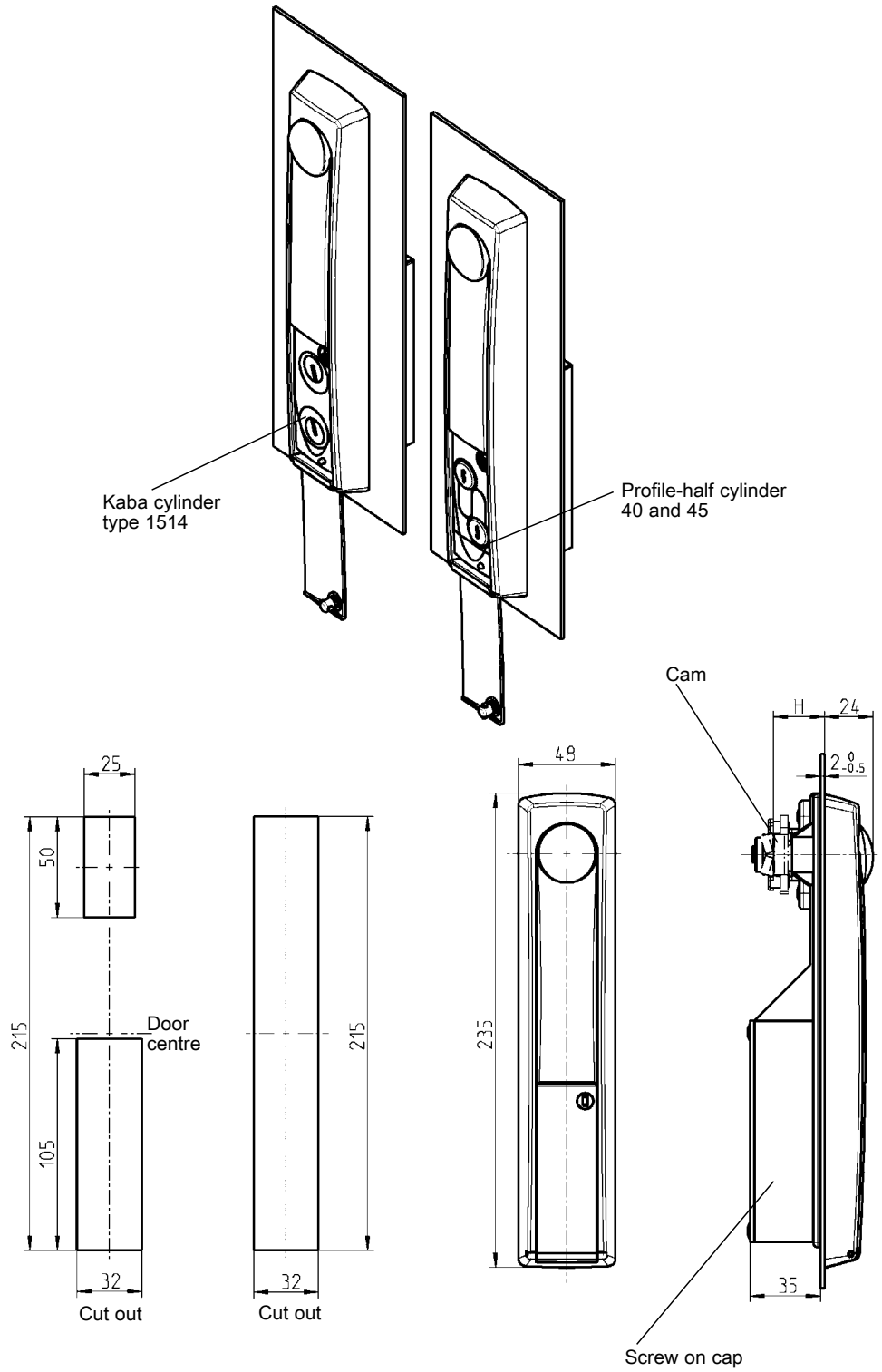

Further parts see page
– Cam 3YC-140
– Profile half cylinder 3XB-220
(please only use 1089-U1 or 1089-U2)

Swinghandle and escutcheon zinc die black powder coated, shaft brass, fixing material m.s. zinc pl., with seal	
Double cylinder swinghandle for profile half cylinder	1225-U60
Blank for using only one profile half cylinder	1109-09-AA
Double cylinder swinghandle for type KABA 1514	1225-U62

© EMKA Beschlagteile GmbH & Co. KG • 2016 • www.emka.com

Swinghandle KABA and ASSA

PROGRAM 1225

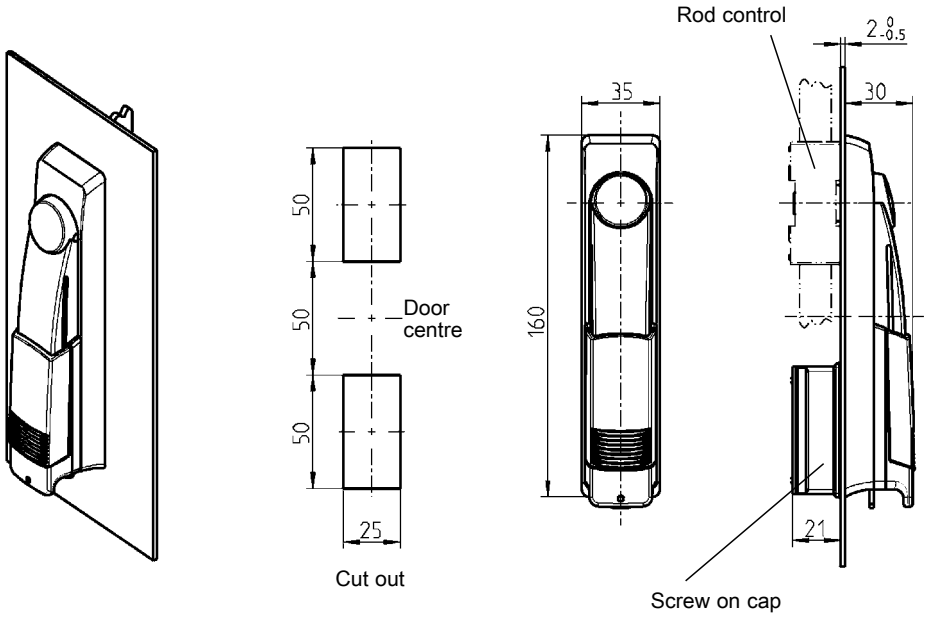

Note: Customer to supply own KABA Cylinder

Swinghandle for KABA-cylinder, polyamide black, lead-sealable Fixing material m.s. Zinc platet with seal	
	1225-U291

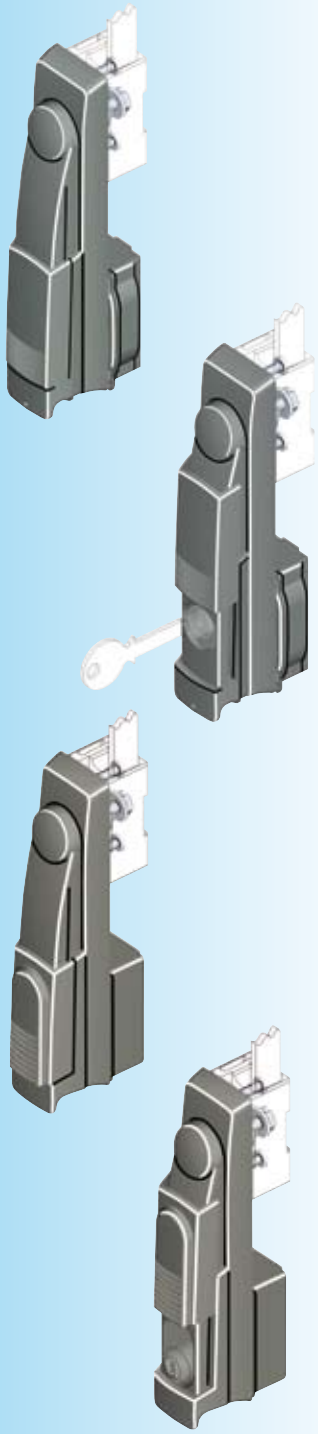

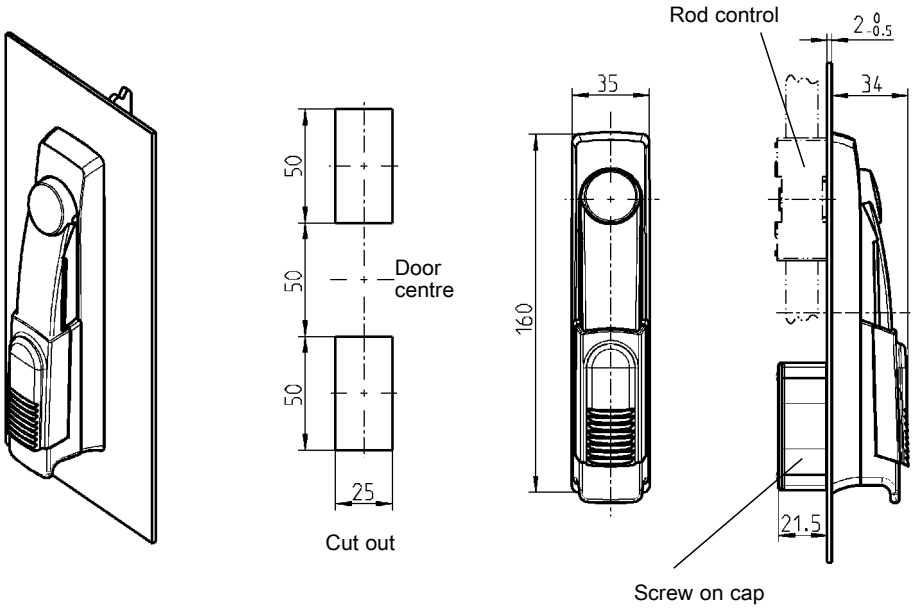

Note: Customer to supply own ASSA Cylinder

Swinghandle for ASSA-cylinder, polyamide black, shaft zinc die zinc pl., fixing material m.s. zinc pl., with seal	
	1225-U198

Further parts see page

– Rod control	3YA-110
	3YA-120
	3YA-140
– Bearing bush	3YB-120

© EMKA Beschlagteile GmbH & Co. KG • 2016 • www.emka.com

EMKA®

Beschlagteile

Swinghandle, small version

PROGRAM 1225

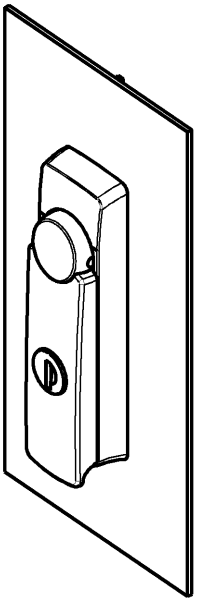

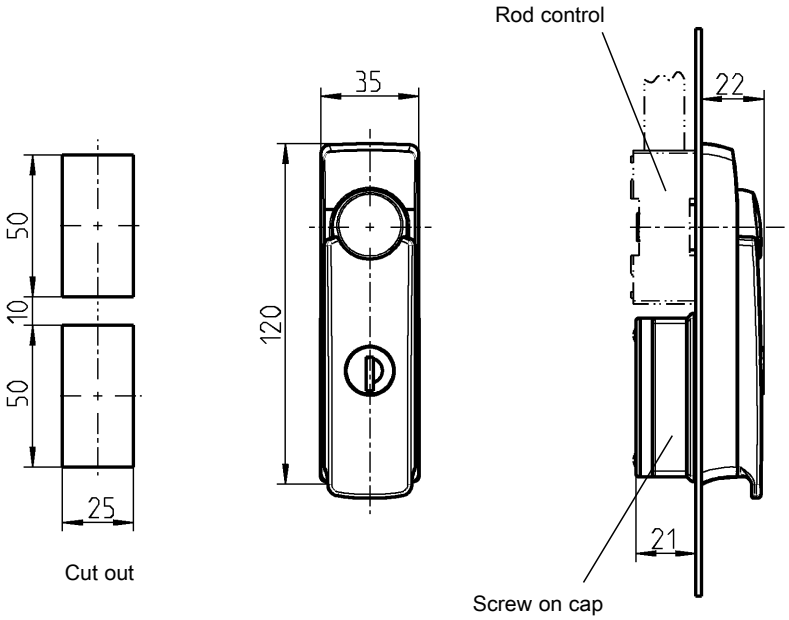

Further parts see page

– Rod control (1121-U60-C or 1121-U61-C)	3YA-160
– Bearing bush (H-dimension Cam > 23)	3YB-120
– Spare key	12B-140

Swinghandle and escutcheon polyamide black, with round cylinder with stainless steel cap and shutter, shaft zinc die zinc plated, fixing material m.s. zinc plated, with seal	
keyed EK 333	1240-U1
keyed different	1240-U2

© EMKA Beschlagteile GmbH & Co. KG • 2016 • www.emka.com

Swinghandle and Escutcheon Program 2100

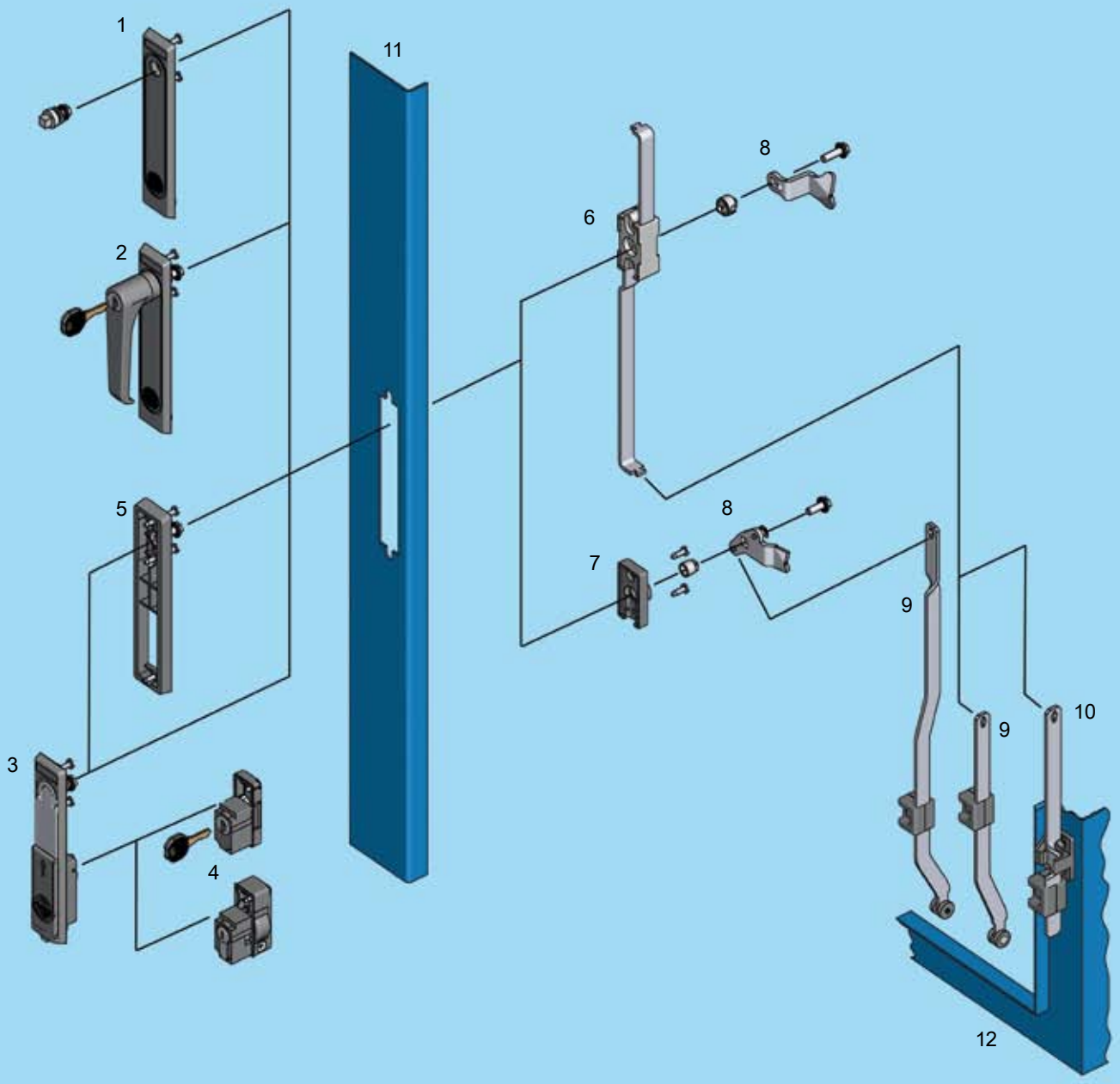

1	Escutcheon 2150 with insert	3H-120
2	Escutcheon 2153 with handle	3H-220
3	Swinghandle	3H-320, 3H-420
4	Locking set	
5	Adapter frame	
6	Rod control	
7	Bearing bush	
8	Cam	
9	Rod (inside the gasketing)	
10	Rod (outside the gasketing)	
11	Door	
12	Cabinet/frame	

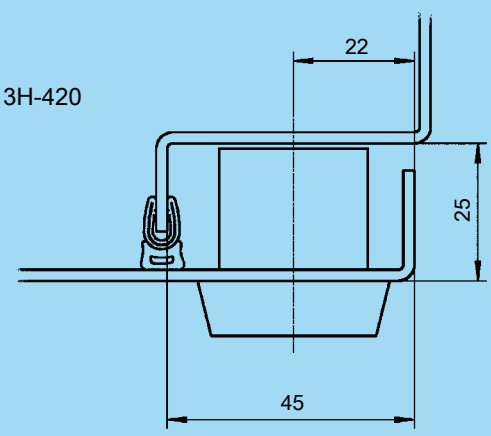

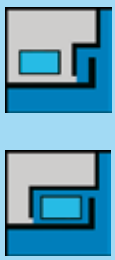

3H-100

EMKA®

Beschlagteile

Escutcheon 2150 with insert

PROGRAM 2100

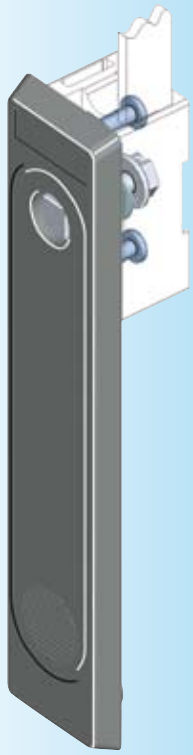

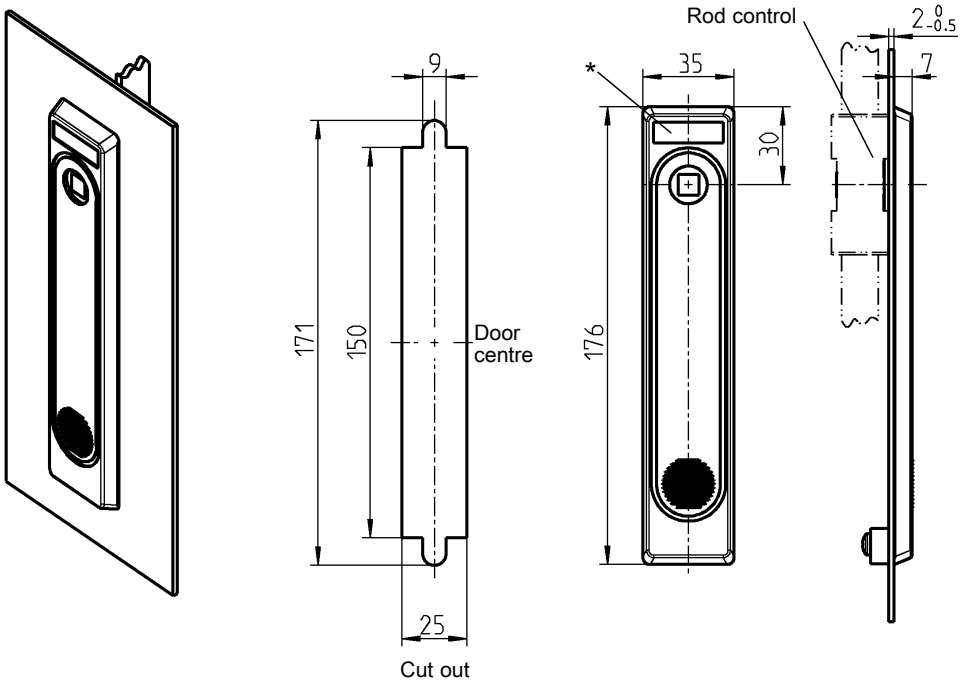

Escutcheon polyamide black, fixing material m.s. zinc plated, with seal			
for square, triangular, Daimler-Benz, slot		2150-U1	
for double bit with mask		2150-U2	
for FIAT		2150-U3	
Insert zinc die chrome pl., fixing material m.s. zinc pl.			
Square 6	1121-U11	Double bit 3**	1121-U16
Square 7	1121-U12	Double bit 5**	1121-U17
Square 8	1121-U13	Square female 8	1121-U167
Triangular 6,5 CNOMO	1121-U169	Daimler Benz	1121-U18
Triangular 7	1121-U14	FIAT	1121-U24
Triangular 8	1121-U15	Slot 2 x 4	1121-U123

* Logo recess: 27 x 8 x 0,5
Multicolour print possible

** in polyamide on request

Accessories

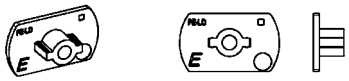

Transport safety device polyamide black for double bit insert

1121-32

Further parts see page
– Key 12B-120
– Rod control 3YA-520
3YA-540
– Bearing bush 3YB-140

© EMKA Beschlagteile GmbH & Co. KG • 2016 • www.emka.com

Escutcheon 2150

PROGRAM 2100

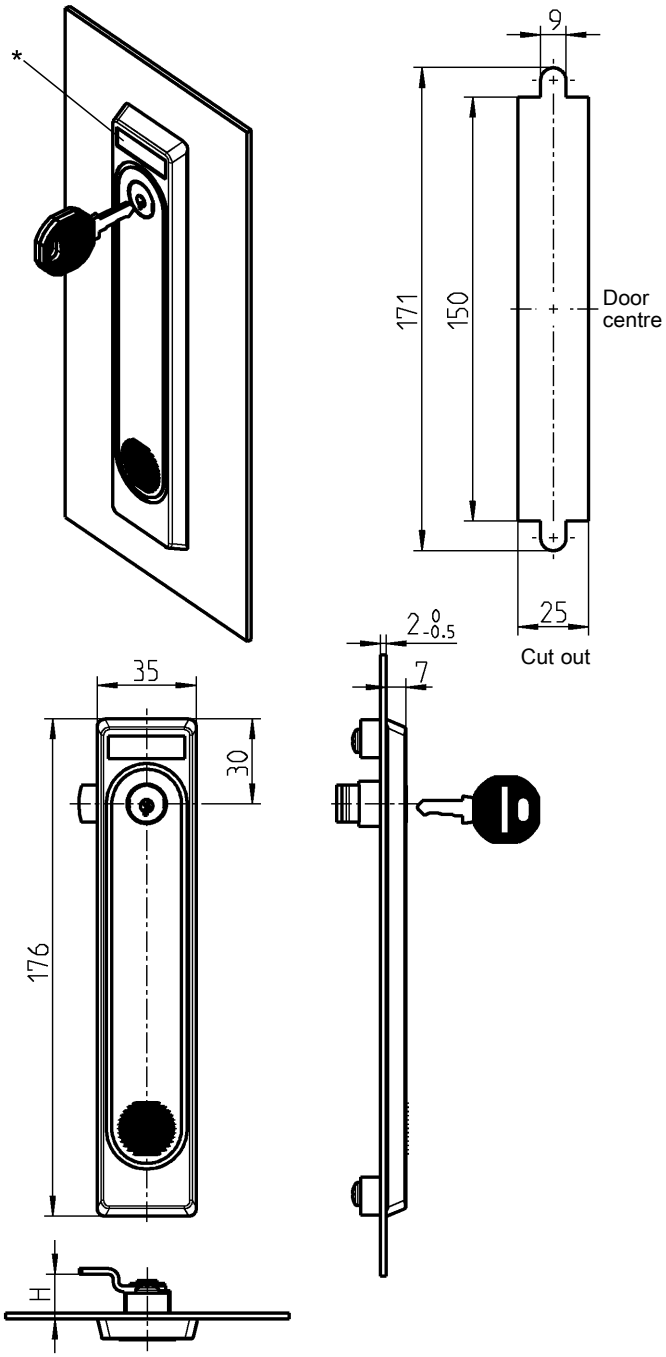

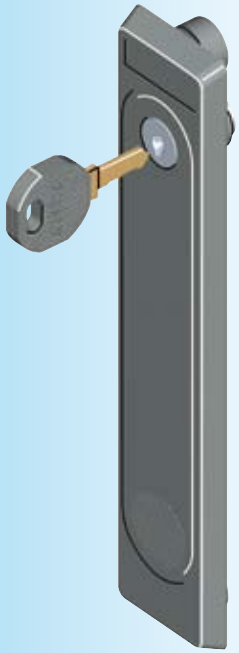

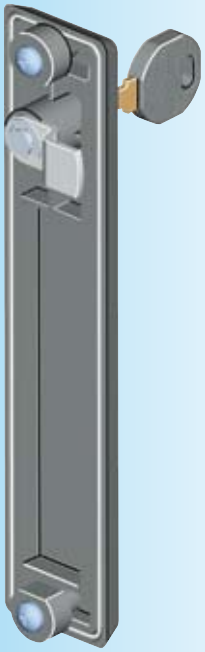

Escutcheon polyamide GF black, round cylinder zinc die with stainless steel cap, fixing material m.s. zinc plated, with seal. Each round cylinder has one silver steel key with polyamide grip GF black.		
H-dimension 4	**LH version**	**RH version**
keyed different	2150-U4	2150-U4-01
keyed alike 2233X	2150-U5	2150-U5-01
H-dimension 10	**LH version**	**RH version**
keyed different	2150-U6	2150-U6-01
keyed alike 2233X	2150-U7	2150-U7-01
H-dimension 16	**LH version**	**RH version**
keyed different	2150-U8	2150-U8-01
keyed alike 2233X	2150-U9	2150-U9-01

* Logo recess: 27 x 8 x 0,5
Multicolour print possible

Turn = 90°

Further parts see page
– Spare key 12B-140

© EMKA Beschlagteile GmbH & Co. KG • 2016 • www.emka.com

EMKA®

Beschlagteile

Escutcheon 2153 with handle

PROGRAM 2100

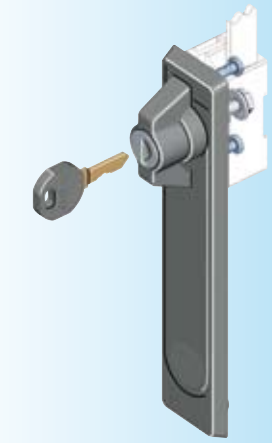

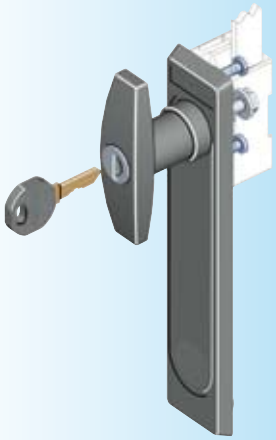

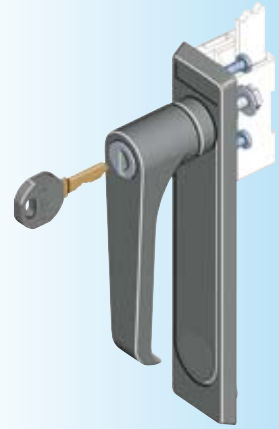

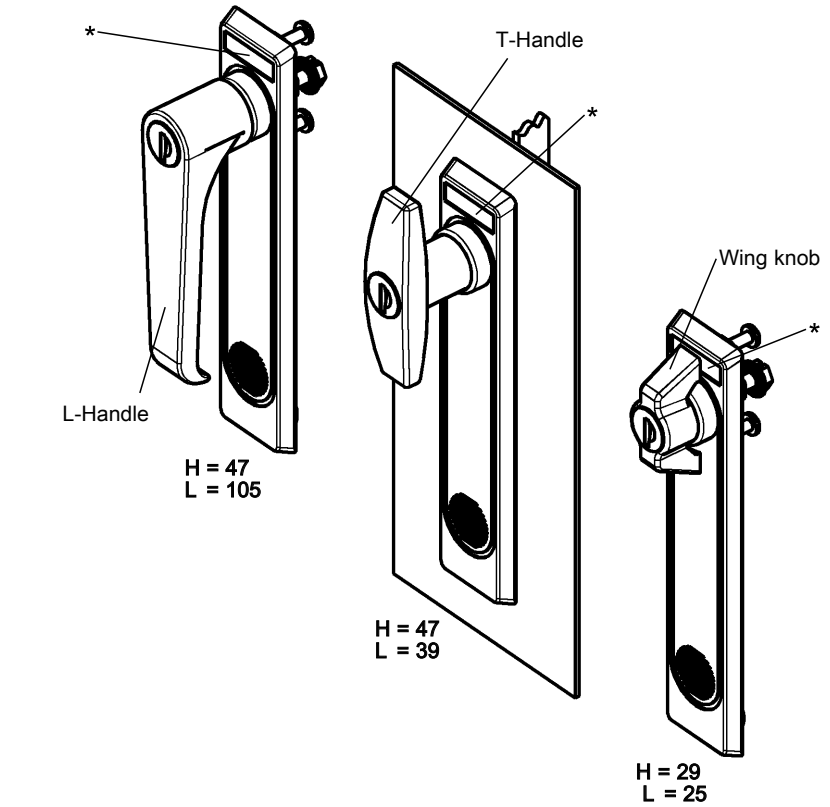

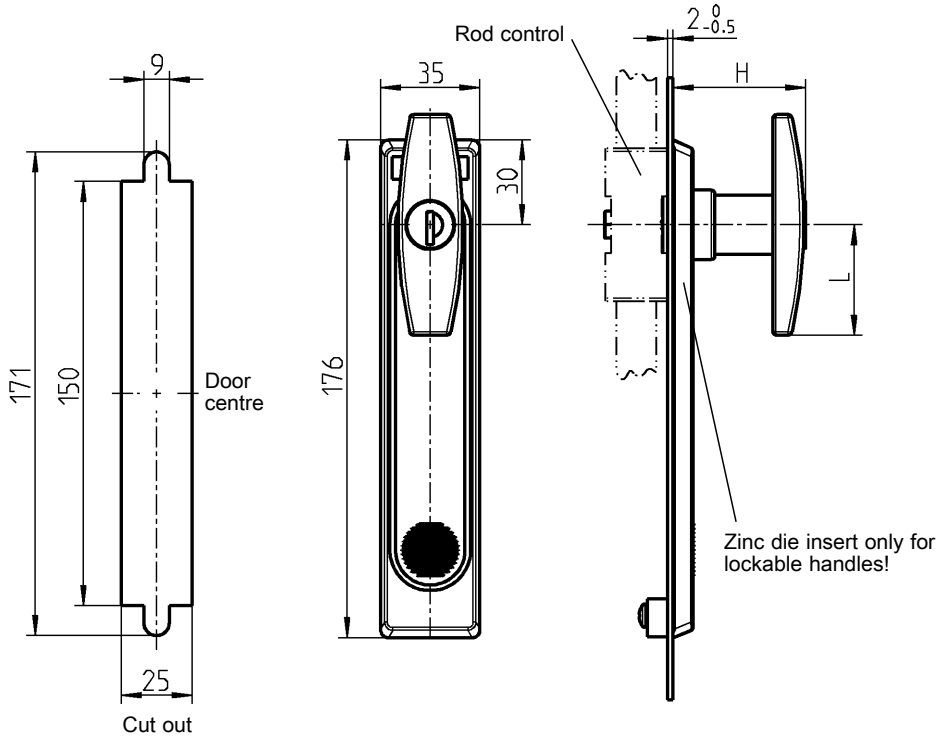

* Logo recess: 27 x 8 x 0,5
Multicolour print possible

** in polyamide on request

Further parts see page

– Spare key	12B-140
– Rod control	3YA-520 3YA-540
– Bearing bush	3YB-140
– Dust cap for T-handle	1C-340

Escutcheon polyamide GF black; handle zinc die black powder coated, round cylinder with stainless steel cap and dust cap, fixing material m.s. zinc plated, with seal. Each round cylinder has one silver steel key with polyamide grip GF black.

	non locking	keyed EK 333	keyed different
Wing knob	2153-U9	2153-U10	2153-U11
T-Handle	2153-U6	2153-U7	2153-U8
L-Handle	2153-U3	2153-U4	2153-U5
Prepared for KABA-cylinder type 1036 with standard locking and / or locking systems			on request

© EMKA Beschlagteile GmbH & Co. KG • 2016 • www.emka.com

Swinghandle

PROGRAM 2100

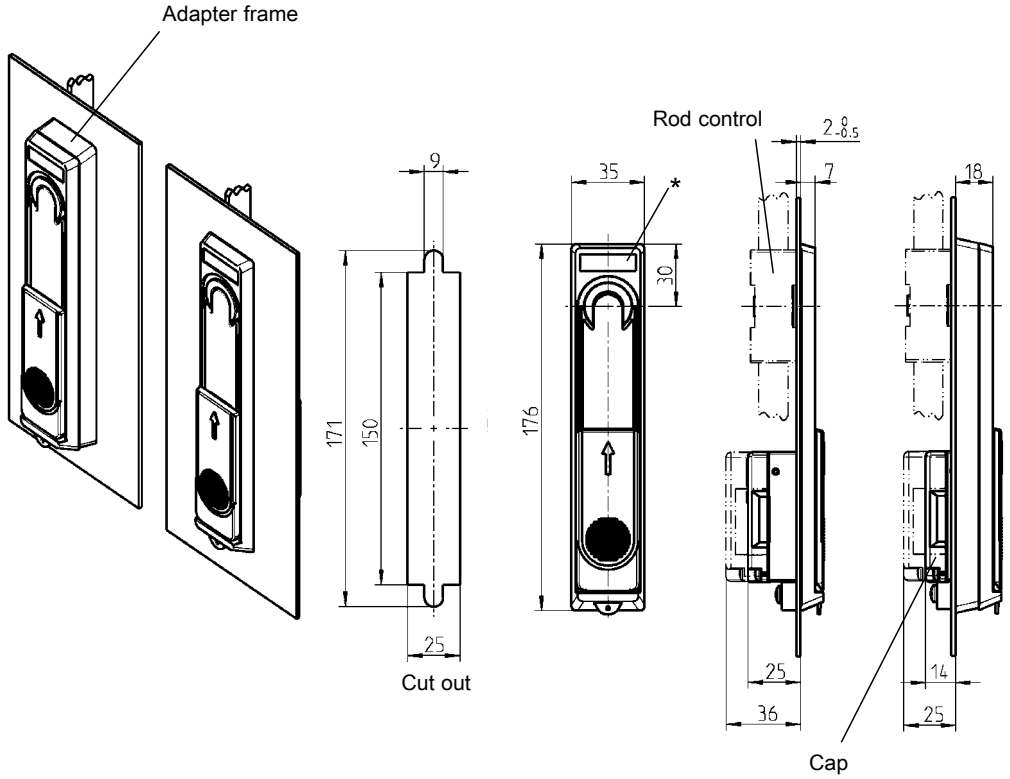

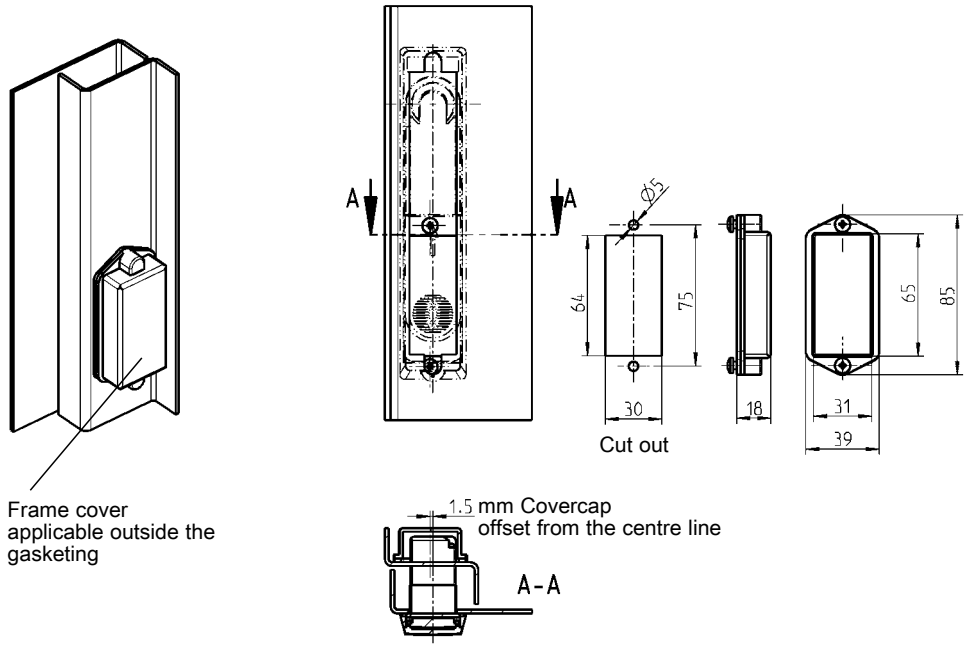

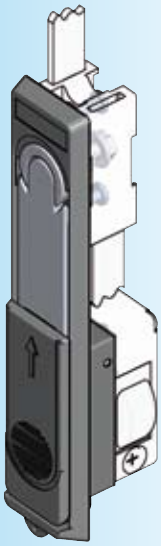

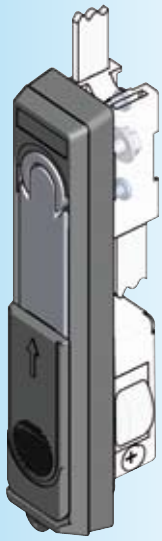

Note:
Swinghandle without locking set

* Logo recess: 27 x 8 x 0,5
Multicolour print possible

Swinghandle polyamide black, handle zinc die chrome pl., fixing material m.s. zinc pl., with seal	
Sliding dust cap polyamide black	2100-U1
Sliding dust cap zinc die black powder coated	2100-U2
Adapter frame polyamide black, adapter cast steel fixing material m.s. zinc pl.	
	2100-U59
Frame cover polyamide black, fixing material m.s. zinc pl. for RH and LH version, with seal	
	2100-U31

Further parts see page

– Locking set	3XA-120
	3XA-140
– Locking set ELM	Chapter 11
– Rod control	3YA-520
	3YA-540
– Bearing bush	3YB-140

© EMKA Beschlagteile GmbH & Co. KG • 2016 • www.emka.com

EMKA®

Beschlagteile

Swinghandle

PROGRAM 2100

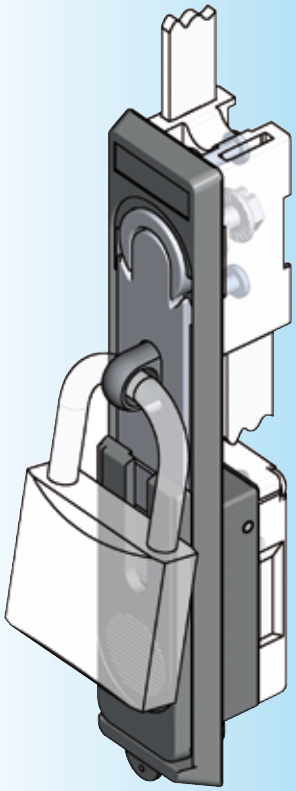

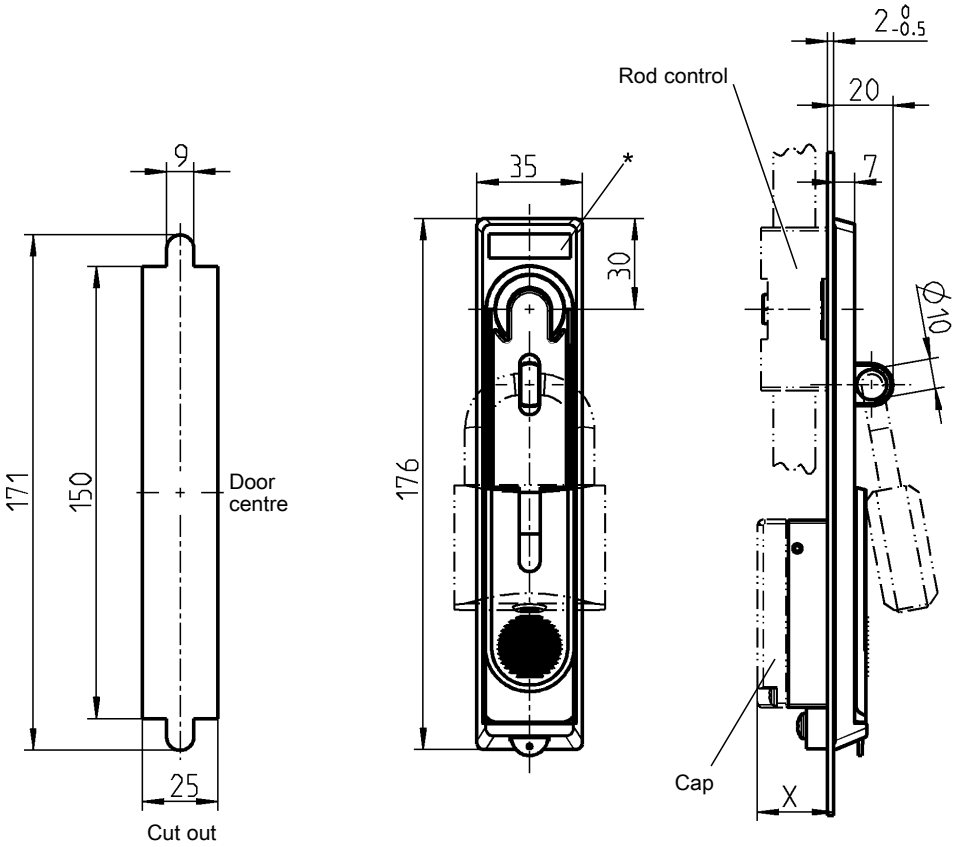

* Logo recess: 27 x 8 x 0,5
Multicolour print possible

Further parts see page

– Locking set	3XA-120
	3XA-140
– Locking set ELM	Chapter 11
– Rod control	3YA-520
	3YA-540
– Bearing bush	3YB-140

Swing handle polyamide GF black; handle zinc die matt chrome plated; sliding cover zinc die black powder coated; padlock shackle AISI 303; Fixing material m.s. zinc plated, with seal	
	2100-U9
Ford version with:	
Locking set square 7	2100-U33

© EMKA Beschlagteile GmbH & Co. KG • 2016 • www.emka.com

Swinghandle
Program 2400

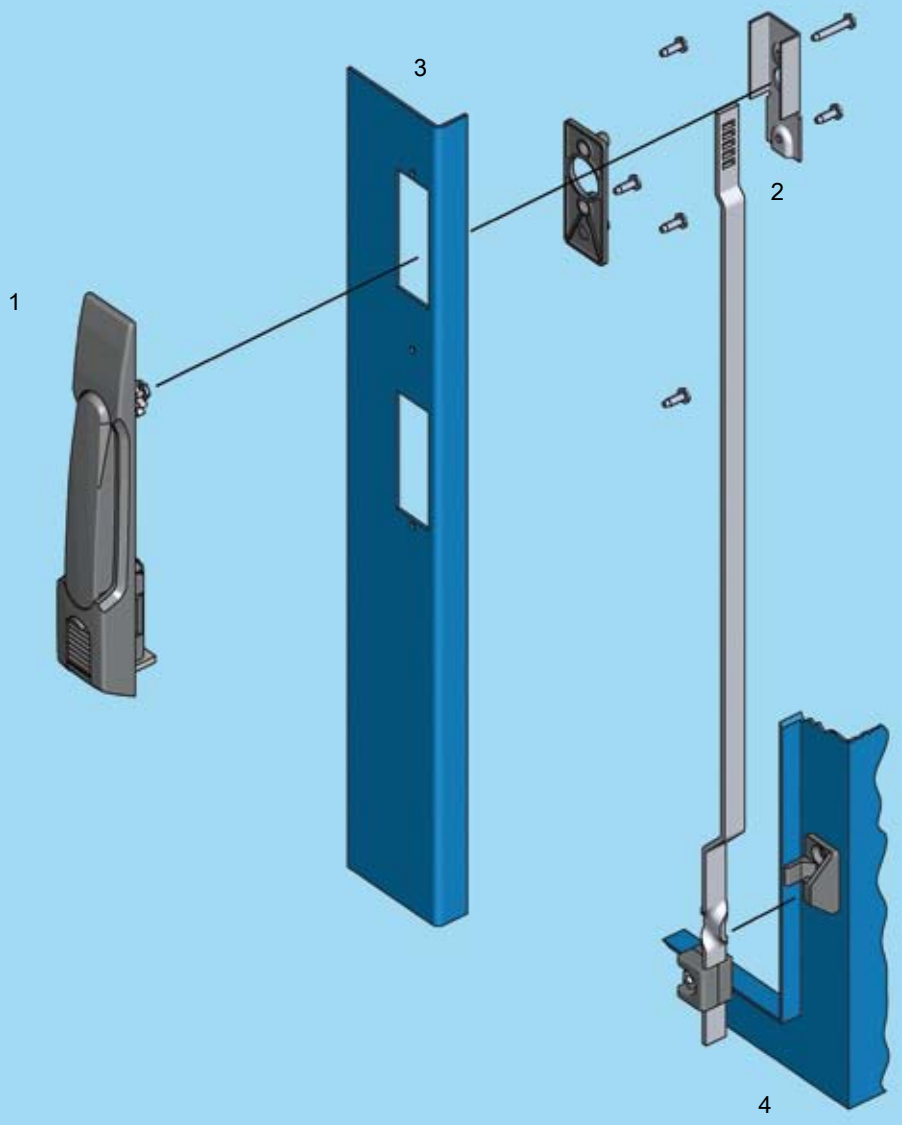

Dimensions for door return
for 1 = see catalogue page 3ZA-820

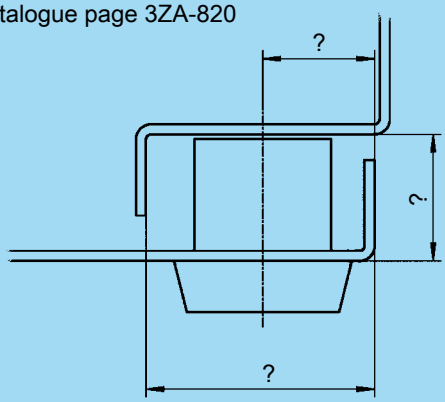

3K-220

1 Swinghandle
2 Rod
3 Door
4 Cabinet/frame

EMKA®

Beschlagteile

Swinghandle

PROGRAM 2400

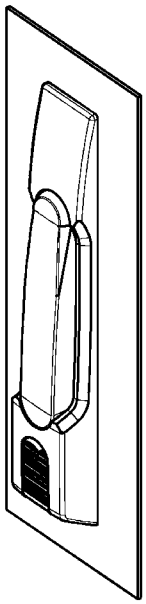

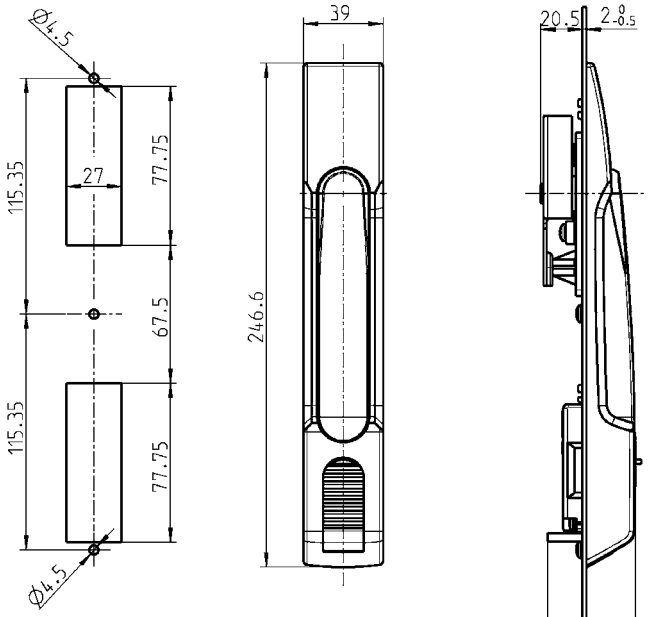

Cut out

Turn = Stroke
90° = 16 mm

Multicolour print possible

Further parts see page

– Locking set	3XA-120
without push button	3XA-140
with push button	3XA-240
– Locking set ELM	Chapter 11
– Rod	
outside	3ZA-820

Swinghandle with pushbutton (2100-U56) polyamide GF black, lock zinc die, fixing material m.s. zinc plated, with seal	
with push button	2400-U3
without push button	2400-U4

© EMKA Beschlagteile GmbH & Co. KG • 2016 • www.emka.com

Swinghandle AGENT E
Program 3000

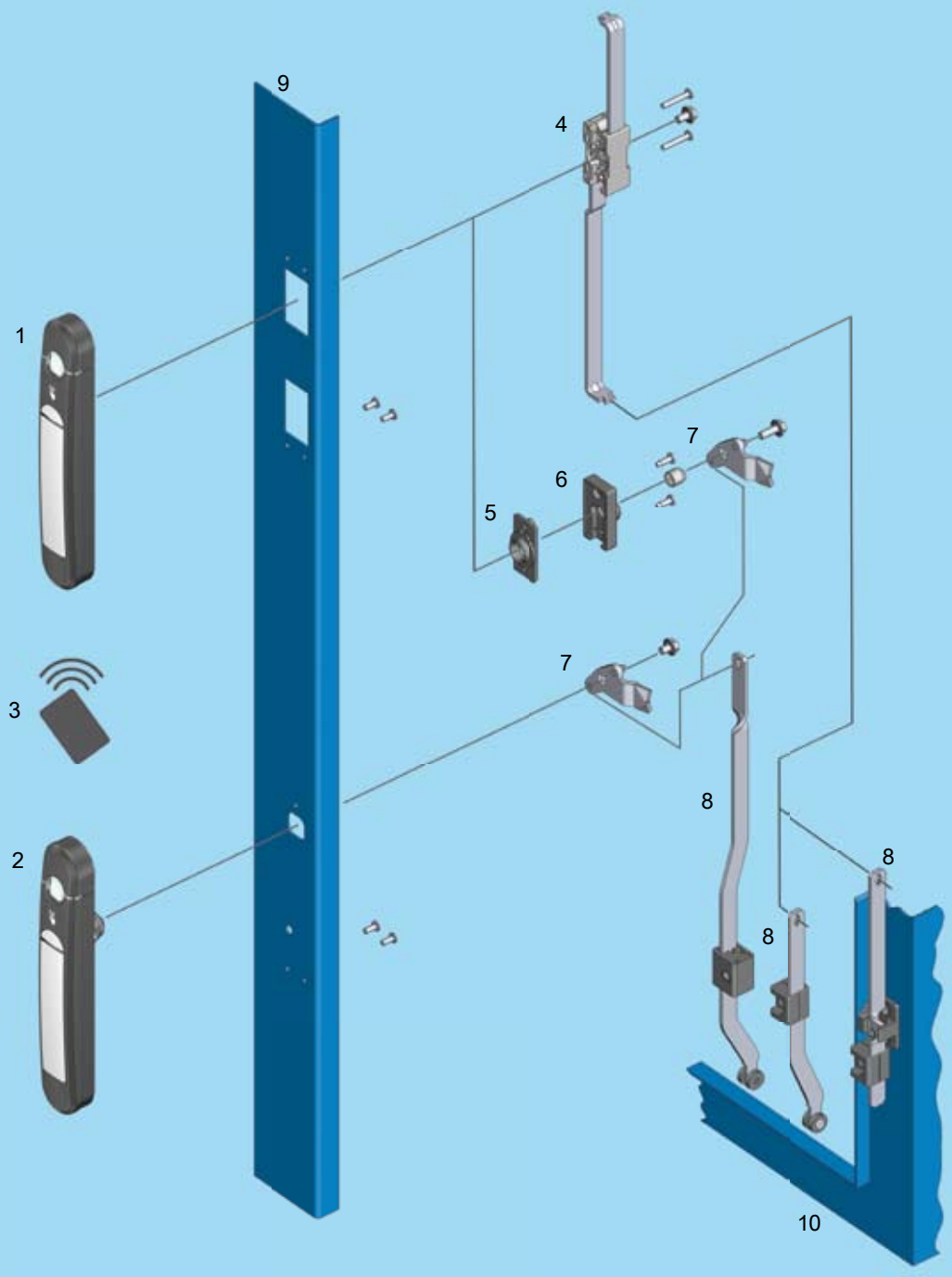

1	Swinghandle for rod control or bearing bush	3N-121
2	Swinghandle with quarter turn for cam	3N-121
3	RFID Card	3N-121
4	Rod control	
5	Adapter plate for bearing bush	
6	Bearing bush	
7	Cam	
8	Rod	
9	Door	
10	Cabinet/frame	

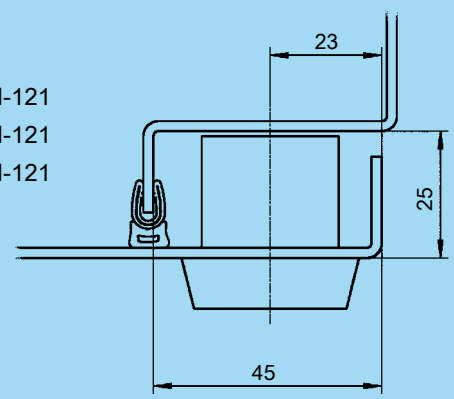

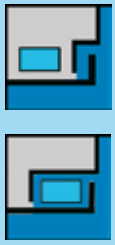

3N-100

Swinghandle AGENT E Wired

PROGRAM 3000

Swinghandle for rod control or bearing bush

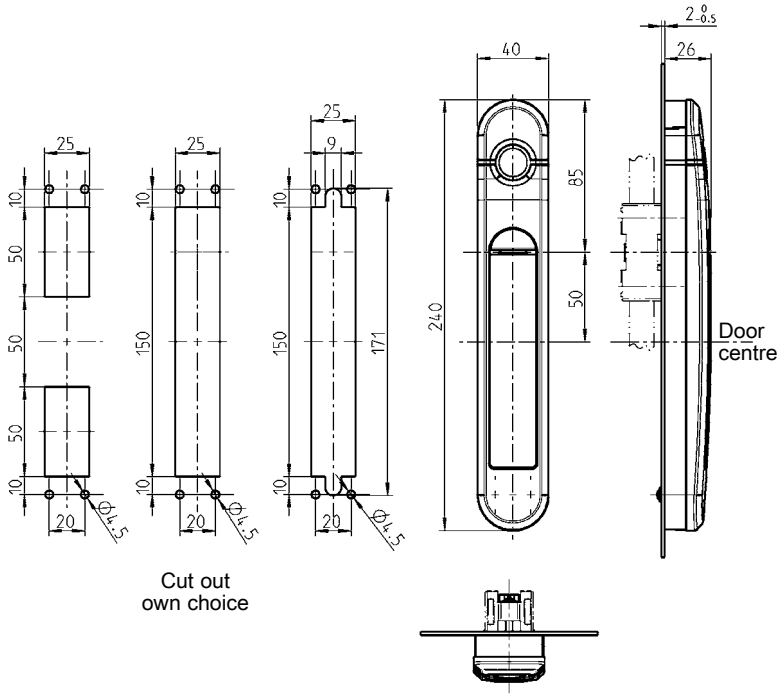

Cut out
own choice

Swinghandle for cam

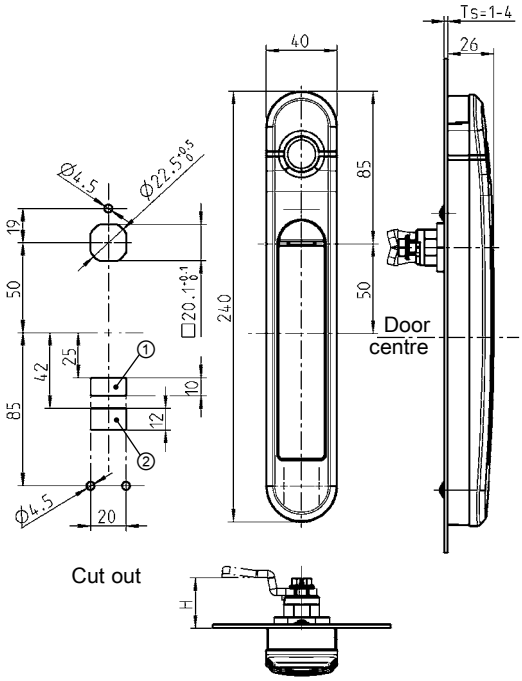

Cut out

Required for
① = power cable
① = door contact

Swinghandle Agent E Wired - functions					TK = door contact
Mode of operation	**Authentication**	**Power**	**Opening Standard**	**Opening Optional**	**Connection option**
Wired (cable network)	RFID card (125 kHz or 13.56 MHz)	cable	immediately	--	Tk
Wired (cable network)	Fingerprint	cable	immediately	--	Tk

max. 32 Access Units per Control Unit ≙ max. 64 handles Agent E Wired

Agent E Wired | Access Unit | Control Unit | Control Cockpit

Agend E Wired is the wired version of the electromechanical swinghandle program.
It enables a central and complete logging of events.
The personalised access is effected safely and conveniently by RFID card reader and fingerprint.

IP 42

Features

- Authentication by 125 kHz or 13.56 MHz RFID cards or by fingerprint. Remote opening is always possible in addition
- Handle type Wired Slave does not have its own authentication and is released in combination with master handle, zentral keypad/central card reader or by remote opening. The opening is effected by touching the sensor field
- 4-eye principle for authentication with 2 authorised cards or cards and fingerprint
- The handle has one connection option for one door contact
- In combination with the Access Unit, the middle LED in the sensor field can be actuated to signal possible malfunctions in the cabinet, such as increased temperature (does not apply to the type Fingerprint)
- Two handles Agent E Wired can be connected to one Access Unit
- Max. 32 Access Units can be administered by one Control Unit
- An emergency power function is possible by using the integrated USB port
- The installation in cabinets / racks of different manufacturers is solved with various adapters. On request

Swinghandle Agent E consisting of: dish polyamide GF black; handle and shaft zinc die white aluminium powder-coated; 2 batteries, instructions		
	for rod control or bearing bush	for cam
Wired with RFID 125 kHz	3000-U900-31	3000-U900-32
Wired mit RFID 13.56 MHz	3000-U900-41	3000-U900-42
Wired with fingerprint	on request	on request
Wired Slave	on request	on request
Transponder card		
125 kHz		3000-87
13.56 MHz		3000-88
Adapter set for bearing sleeve; adapter plate polyamide GF black; adapter m.s. precision casting zinc plated; fixing material m.s. zinc plated		
for door thickness 1.0 - 3.0		3000-U104-01
Adapter set for retrofitting		
various cabinet types		on request
USB adapter cable		
USB Standard-A on USB Micro-B		3000-U102

Further parts see page
– Control Unit 11A-210
– Access Unit 11A-230
– Control Cockpit 11A-510
– Door contact 11A-400
– Rod control 3YA-120
3YA-140
– Bearing bush 3YB-120
– Cam (GH=18) 1C-120

© EMKA Beschlagteile GmbH & Co. KG • 2016 • www.emka.com

Schwenkgriff AGENT E Wireless

PROGRAM 3000

Swinghandle for rod control or bearing bush

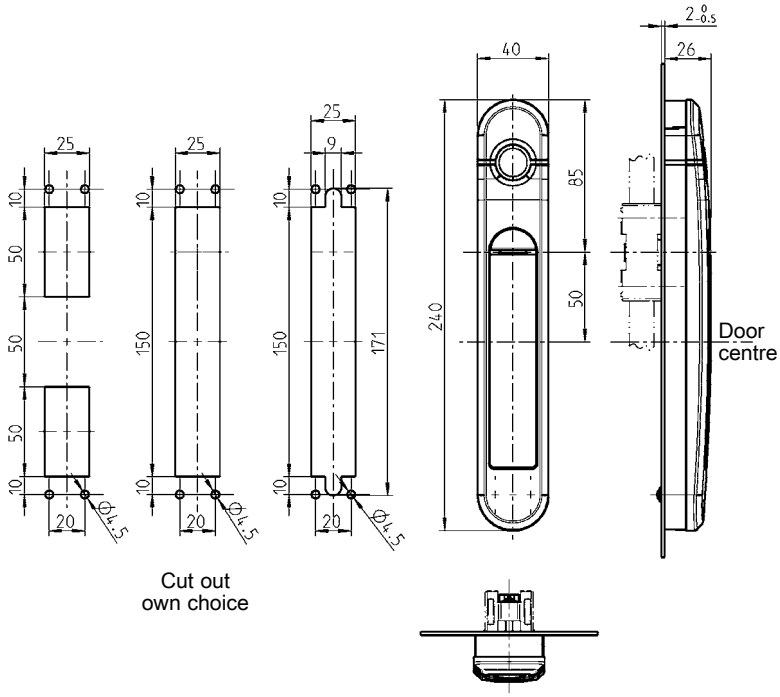

Cut out
own choice

Swinghandle for cam

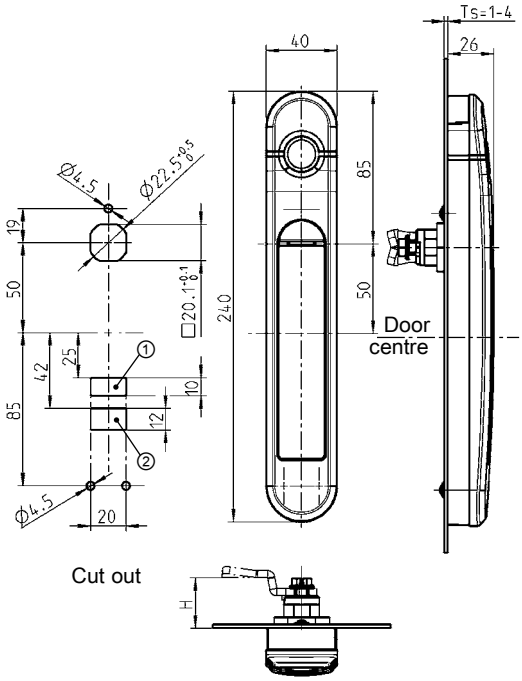

Cut out

Required for
① = power cable
② = door contact

Swinghandle Agent E Wireless - functions					TK = door contact
Mode of operation	**Authentication**	**Power**	**Opening Standard**	**Opening Optional**	**Contact**
Wireless	RFID Card (125 kHz or 13.56 MHz)	battery	immediately	--	Tk
Wireless (wireless network)	Fingerprint	battery	immediately	--	Tk

max. 16 Access Units Wireless per Control Unit ≡ 1,200 handles Agent E Wireless

Agent E Wireless

Access Unit Wireless

Control Unit Wireless

Control Cockpit

The Agent E Wireless is the only swinghandle so far with wireless network based communication. Due to its wireless and thus cost-saving mounting it is most suitable for retrofitting in data centres.
The authentication is effected either by RFID or by fingerprint. A highly efficient power management guarantees a long battery life.

RL

IP 42

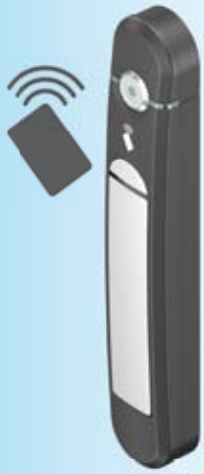

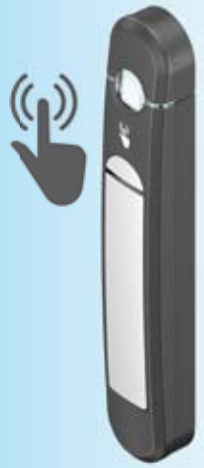

Features

- Wireless communication for data exchange via wireless network with Access Units Wireless (industry standard depending on country regulation)
- One Control Unit Wireless can actuate up to 1,200 handles Agent E Wireless using Access Units Wireless in one wireless network
- The authentication can be effected by fingerprint or RFID transponder cards with 125 kHz or 13.56 MHz. Remote opening is always possible in addition
- Extremely energy-efficient battery operation (running life battery min. 3 years)
- 4-eye principle for authentication with 2 authorised cards or cards and fingerprint
- The handle has one connection option for one door contact
- An emergency power function is possible with the integrated USB port
- Agent E Wireless is most suitable for retrofitting due to its wireless mounting
- The installation in cabinets by different manufacturers is solved by means of various adapters. On request

Swinghandle Agent E consisting of: dish polyamide GF black; handle and shaft zinc die white aluminium powder-coated; 2 batteries, instructions		
③ Wireless type for all EU countries plus Switzerland and Norway	for rod control or bearing bush	for cam
Wireless with RFID 125 kHz	3000-U901-31	3000-U901-32
Wireless with RFID 13.56 MHz	3000-U901-41	3000-U901-42
Wireless with fingerprint	on request	on request
Transponder card		
125 kHz		3000-87
13.56 MHz		3000-88
Adapter set for bearing bush; adapter plate polyamide GF black; adapter m.s. precision casting zinc plated; fixing material m.s. zinc plated		
for door thickness 1.0 - 3.0		3000-U104-01
Adapter set for retrofitting		
various cabinet types		on request

③ Note:
Wireless types for other countries on request

Further parts see page

– Access Unit Wireless	11A-220
– Control Unit Wireless	11A-220
– Control Cockpit	11A-510
– Door contact	11A-400
– Rod control	3YA-120
	3YA-140
– Bearing bush	3YB-120
– Cam (GH=18)	1C-120

© EMKA Beschlagteile GmbH & Co. KG • 2016 • www.emka.com

Swinghandle AGENT E RFID Stand-alone

PROGRAM 3000

Swinghandle for rod control or bearing bush

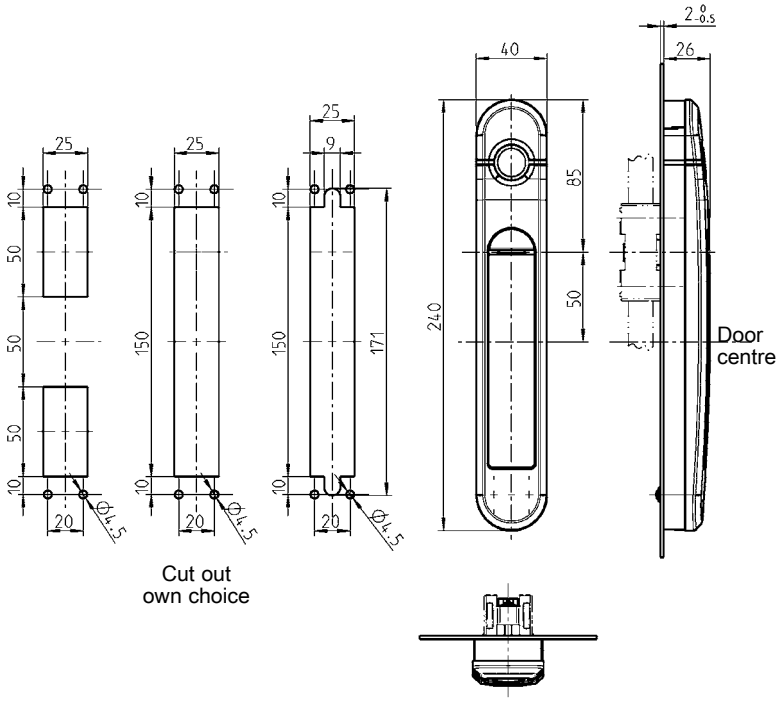

Swinghandle for cam

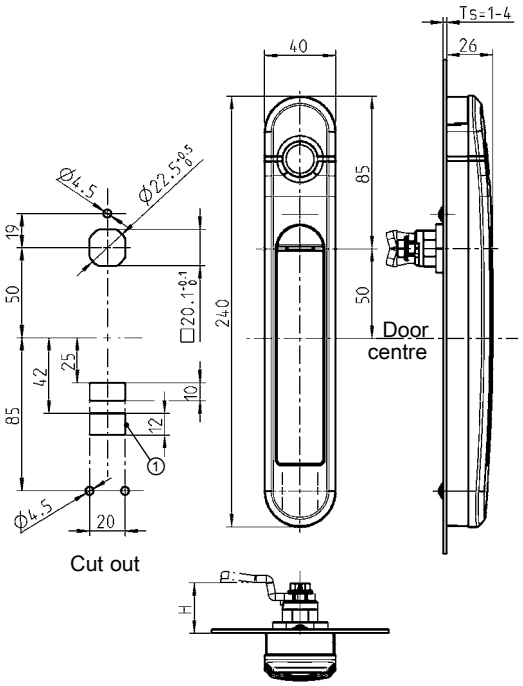

Required for
① = door contact

Schwenkgriff Agent E RFID Stand-alone - functions					Tk = door contact; SA = status display
Mode of operation	**Authentication**	**Power**	**Opening Standard**	**Opening Optional**	**Connection option**
Stand-alone	RFID card (125 kHz or 13.56 MHz)	battery	immediately		Tk

max. 100 transponder cards per handle
Card management via USB with software tool

RL

Agent E RFID Stand-alone
This version consist of a battery-operated AGENT E handle with integrated card reader for 125 kHz or 13.56 MHz transponder cards.
By presenting an authorised card the handle will spring open.
Easy to configure using software.

This handle does not require any external wiring for working.

Features

- Battery-operated handled with integrated RFID reader
- Authentication by 125 kHz or 13.56 MHz transponder cards
- Extremely energy-efficient battery operation (running life battery min. 3 years)
- Configuration via USB port with Agent E configuration software (card administration, time profiles, reading out event logs)
- All handles have a connection option for one door contact
- Data storage for 5,000 events
- Emergency power function and emergency opening via USB port
- The installation in cabinets by different manufacturers is solved by means of various adapters. On request

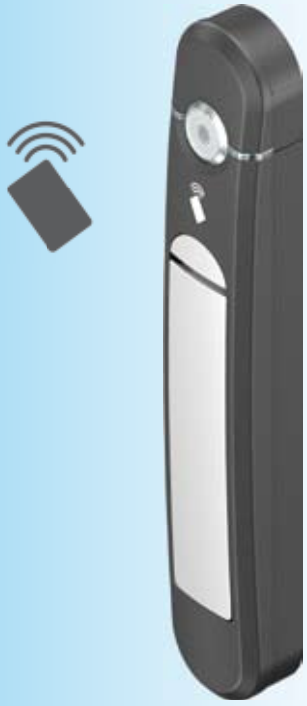

Swinghandle Agent E consisting of: dish polyamide GF black; handle and shaft zinc die white aluminium powder-coated; 2 batteries, instructions		
	for rod control or bearing bush	for cams
Stand-alone with RFID 125 kHz	on request	on request
Stand-alone with RFID 13.56 MHz	3000-U900-21	3000-U900-22
Transponder card		
125 kHz		3000-87
13.56 MHz		3000-88
Adapter set for bearing bush; adapter plate polyamide GF black; adapter m.s. precision casting zinc plated; fixing material m.s. zinc plated		
for door thickness 1.0 - 3.0		3000-U104-01
Adapter set for retrofitting		
various cabinet types		on request
USB adapter cable		
USB Standard-A on USB Micro-B		3000-U102

Further parts see page
– Rod control 3YA-120
3YA-140
– Bearing bush 3YB-120
– Cam (GH=18) 1C-120
– Door contact 11A-400

© EMKA Beschlagteile GmbH & Co. KG • 2016 • www.emka.com

EMKA®

Beschlagteile

Notes:

Locking sets Program 1107, 1150, 1180, 1190, 1390, 2100, 2400

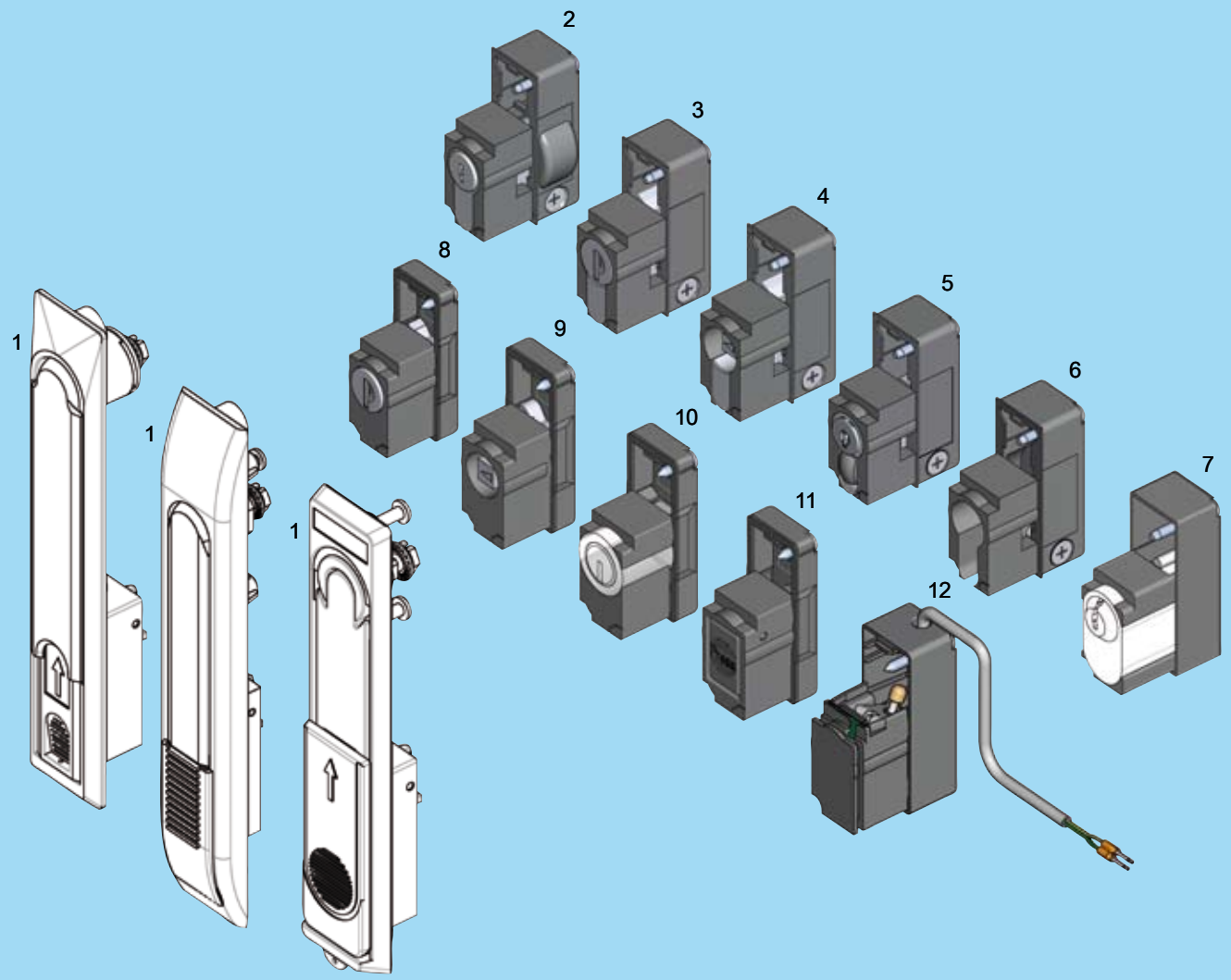

1 Swinghandle program 1107, 1150, 1180, 1190, 1390, 2100, 2400
2 Locking set with profile half cylinder according to DIN 18252
3 Locking set with profile half cylinder with round cylinder
4 Locking set with profile half cylinder with insert
5 Locking set with profile half cylinder with round cylinder and push button
6 Locking set for profile half cylinder according to DIN 18252 is provided by the customer
7 Locking set for ASSA-cylinder is provided by the customer
8 Locking set with round cylinder
9 Locking set with insert
10 Locking set for KABA-cylinder is provided by the customer
11 Locking set with push button
12 Locking set ELM see chapter 11

EMKA®

Beschlagteile

Locking set

PROGRAM 1107, 1150, 1180, 1190, 1390, 2100, 2400

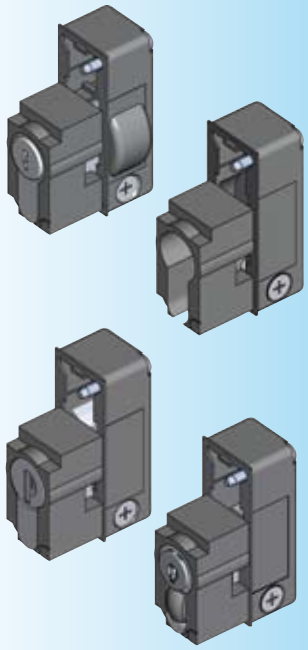

1109-U52 and 1109-U53.
In the unlocked position the handle operates by pressing the push button

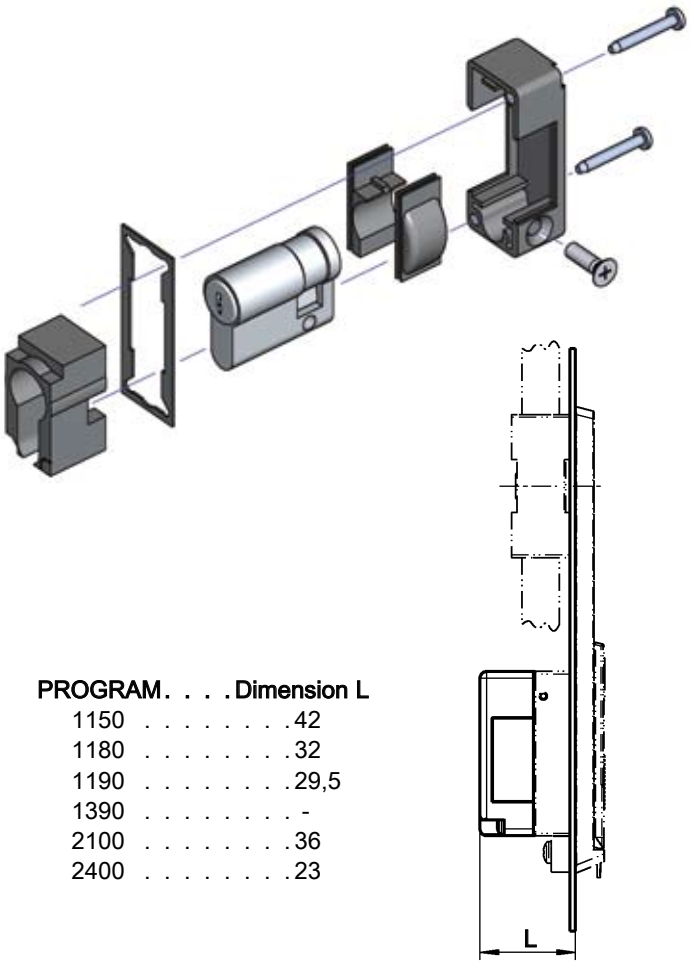

PROGRAM	Dimension L
1150	42
1180	32
1190	29,5
1390	-
2100	36
2400	23

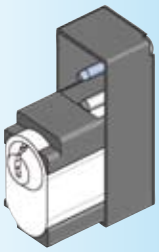

2100-U6
for ASSA-cylinder. Attention! ASSA-cylinder and 2 fixing screws M5x8 are not included

Locking set polyamide black with or without profile half cylinder or ASSA-cylinder, fixing material m.s. zinc pl., with seal			
Locking set profile half cylinder according to DIN 18252, brass nickel plated with 3 keys			
keyed different	1089-U5	keyed alike 110319 N	1089-U6
for 40 mm Profile half cylinder (A=30 mm) to be supplied by the customer			2100-U11
Locking set profile half cylinder with round cylinder zinc die with stainless steel cap and dust cap. Each cylinder has one silver steel key with polyamide GF grip black.			
keyed different	1109-U50	keyed EK333	1109-U51
Locking set profile half cylinder with push button, round cylinder zinc die chrome plated. Each cylinder has one silver steel key with polyamide GF grip black.			
keyed different	1109-U52	keyed alike 2233X	1109-U53
Locking set profile half cylinder with insert zinc die chrome plated			
Square 6	1109-U18	Double bit 3	1109-U34
Square 7	1109-U19	Double bit 5	1109-U35
Square 8	1109-U20	Hexagon female 10	1109-U27
Square 8 slotted	1109-U21	Square female 6	1109-U28
Triangular 6,5 CNOMO	1109-U22	Square female 8	1109-U29
Triangular 7	1109-U23	Daimler Benz	1109-U30
Triangular 8	1109-U24	Slot 1,2 x 3	1109-U31
Triangular 9	1109-U25	Slot 2 x 4	1109-U32
Triangular 10	1109-U26	Crown type	1109-U33
		Eastern Europe Ø 13	1109-U58
Locking set for ASSA-cylinder is provided by the customer (without seal)			
			2100-U6

Further parts see page
– Key 12B-120

Program 1150
– Swinghandle 1151 3C-420
3C-440

Program 1180
– Swinghandle 3E-120
up to 3E-520

Program 1190
– Lifthandle 3F-120

Program 1390
– Lifthandle 3FA-120

Program 2100
– Swinghandle 3H-320
up to 3H-420

Program 2400
– Swinghandle 3K-220

© EMKA Beschlagteile GmbH & Co. KG • 2016 • www.emka.com

Locking set

PROGRAM 1107, 1150, 1180, 1390, 2100, 2400

All round cylinders and inserts are spring loaded

PROGRAM	Dimension L
1150	31,5
1180	21,5
1390	-
2100	25
2400	20

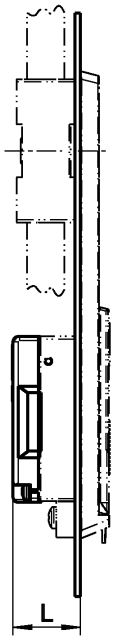

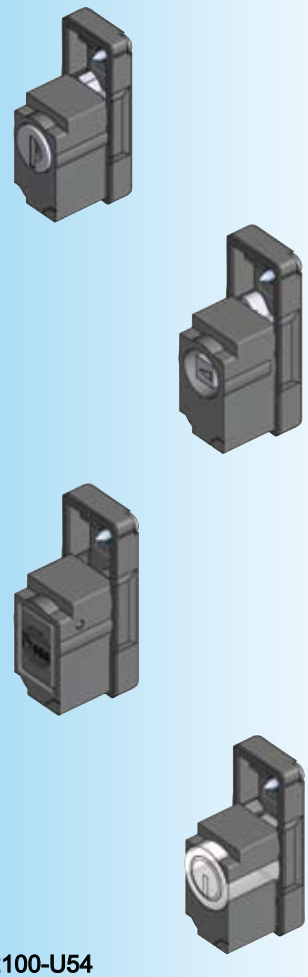

2100-U54
Prepared for KABA cylinder.
Attention! KABA-cylinder and 2 counter sunk screws M2,3x8 are not included!

Locking set polyamide black with round cylinder or insert, fixing material m.s. zinc plated, with seal			
Locking set round cylinder zinc die with stainless steel cap and dust cap. Each cylinder has one silver steel key with polyamide GF grip black.			
keyed EK333	2100-U48	keyed different	2100-U49
Assembling set for KABA cylinder type 1036 (cylinder from customer)			2100-U54
Locking set insert zinc die chrome plated			
Square 6	2100-U32	Hexagon female 10	2100-U41
Square 7	2100-U33	Square female 6	2100-U42
Square 8	2100-U34	Square female 8	2100-U43
Square 8 slotted	2100-U35	Daimler Benz	2100-U44
Triangular 6,5 CNOMO	2100-U36	FIAT version	2100-U53
Triangular 7	2100-U37	Slot 1,2 x 3	2100-U45
Triangular 8	2100-U38	Slot 2 x 4	2100-U46
Triangular 9	2100-U39	Crown type	2100-U47
Triangular 10	2100-U40	Eastern Europe Ø 13	2100-U58
Double bit 3	2100-U50	Push button	2100-U57
Double bit 5	2100-U51		

Further parts see page
– Key 12B-120

Program 1150
– Swinghandle 1151 3C-420
3C-440

Program 1180
– Swinghandle 1185 3E-520

Program 1390
– Lifthandle 3FA-120

Program 2100
– Swinghandle 3H-320
up to 3H-420

Program 2400
– Swinghandle 3K-220

© EMKA Beschlagteile GmbH & Co. KG • 2016 • www.emka.com

EMKA®

Beschlagteile

Locking set

PROGRAM 1180, 1190, 2400

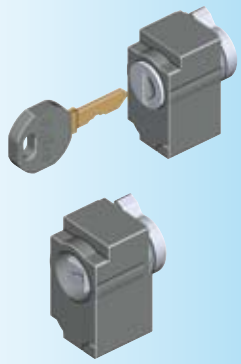

All round cylinders and inserts are spring loaded

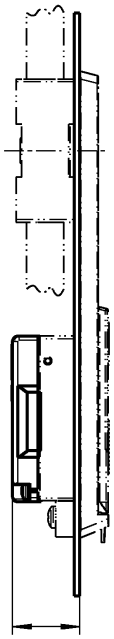

PROGRAM	Dimension L
1180	21,5
1190	29,5
2400	20

Locking set polyamide GF black, fixing material m.s. zinc plated	
Round cylinder zinc die with stainless steel cap and dust cap. Each cylinder has one silver steel key with polyamide GF grip black.	
keyed EK 333	2100-B30
keyed different	2100-B31
Inserts: Chrome plated zinc alloy	
Square 6	2100-B14
Square 7	2100-B15
Square 8	2100-B16
Square 8 slotted	2100-B17
Triangular 6,5 CNOMO	2100-B18
Triangular 7	2100-B19
Triangular 8	2100-B20
Triangular 9	2100-B21
Triangular 10	2100-B22
Double bit 3	2100-B32
Double bit 5	2100-B33
Hexagon female 10	2100-B23
Square female 6	2100-B24
Square female 8	2100-B25
Daimler Benz	2100-B26
FIAT version	2100-B34
Slot 1,2 x 3	2100-B27
Slot 2 x 4	2100-B28
Crown type	2100-B29
Eastern Europe Ø 13	2100-B36
Push button	2100-U56

Further parts see page
– Key 12B-120
Program 1180
– Swinghandle 1180 3E-120
up to 3E-320
Program 1190
– Swinghandle 3F-120
Program 2400
– Swinghandle 3K-220

© EMKA Beschlagteile GmbH & Co. KG • 2016 • www.emka.com

Locking set profile half cylinder

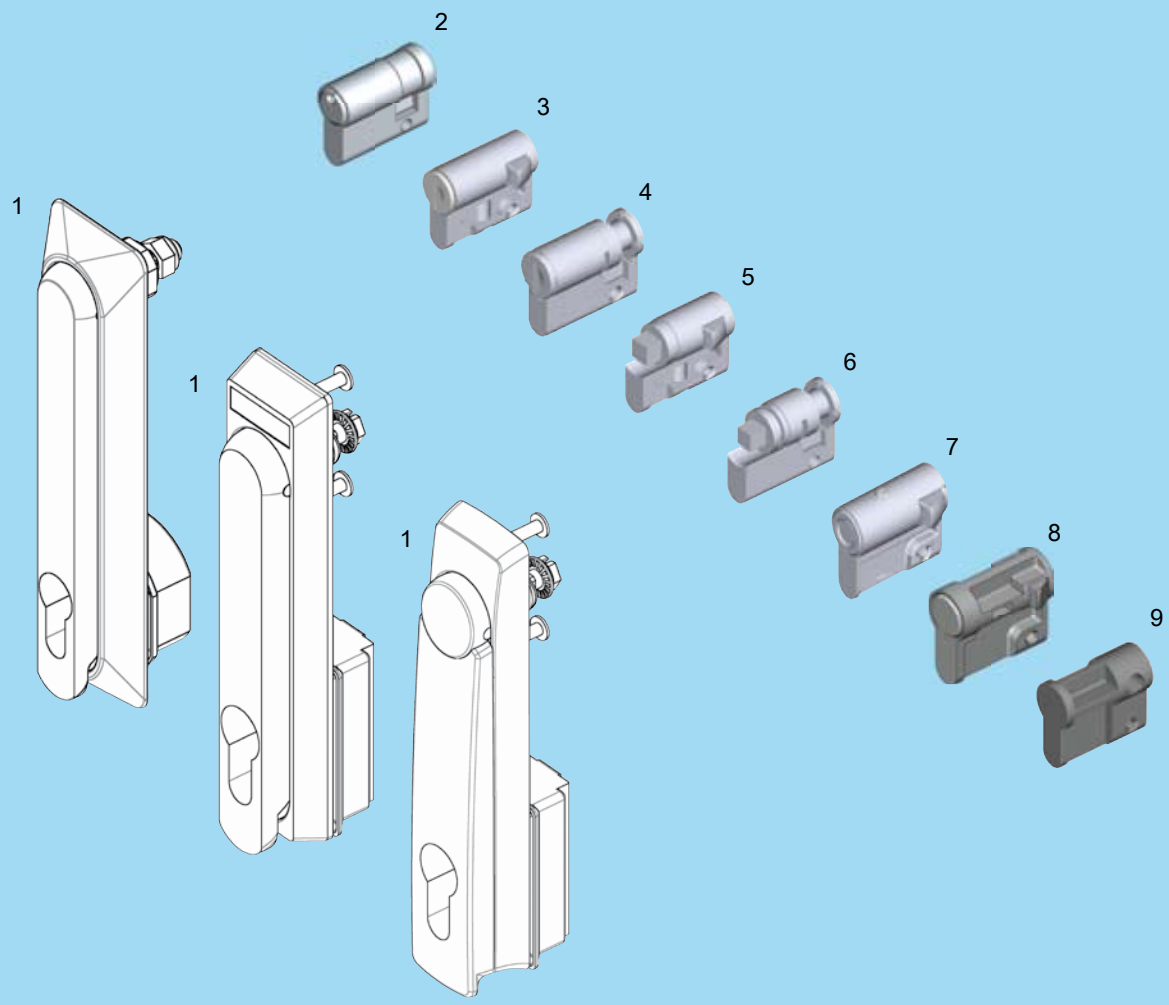

1 Swing handle Program 1107, 1125, 1150, 1225, 1190, 1317, 1325
2 Profile half cylinder DIN 18252
3 Profile half cylinder with spring loaded round cylinder
4 Profile half cylinder with round cylinder
5 Profile half cylinder with spring loaded insert
6 Profile half cylinder with insert
7 Profile half cylinder with spring loaded radial pin-push cylinder
8 Profile half cylinder with push button
9 Blind plug

Profile half cylinder

PROGRAM 1107, 1125, 1150, 1225, 1317, 1325

Profile half cylinder according to DIN 18252 (EN 1303)

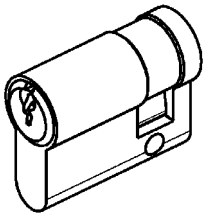

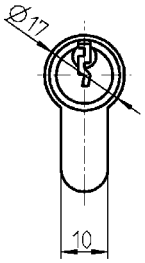

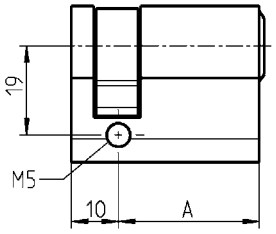

Profile half cylinder according to DIN 18 252 brass nickel plated with 3 keys		
keyed different	A = 30	1089-U1
keyed 110319 N	A = 30	1089-U2
(Master key system on request)		

EMKA profile half cylinder

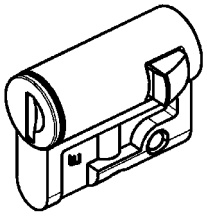

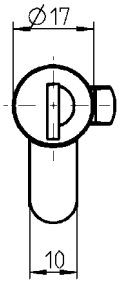

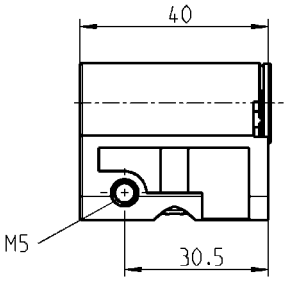

EMKA profile half cylinder with round cylinder zinc die with stainless steel cap and dust cap, one key made of nickel silver per round cylinder with grip polyamide GF black.	
keyed different	1109-U1-N
keyed EK 333	1109-U2-N
EMKA profile half cylinder with insert zinc die chrome plated, locking catch of slam type.	
Square 6	1109-U4-N
Square 7	1109-U5-N
Square 8	1109-U6-N
Square 8 slotted	1109-U7-N
Triangular 6,5 CNOMO	1109-U17-N
Triangular 7	1109-U8-N
Triangular 8	1109-U9-N
Double bit 3	1109-U10-N
Double bit 5	1109-U11-N
Hexagon female 8	1109-U12-N
Hexagon female 10	1109-U13-N
Square female 8	1109-U55-N
Slot 2 x 4	1109-U14-N
Daimler Benz	1109-U15-N
Eastern Europe Ø 13	1109-U54-N

© EMKA Beschlagteile GmbH & Co. KG • 2016 • www.emka.com

EMKA profile half cylinder with insert

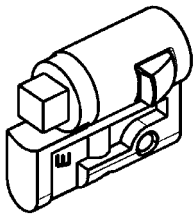

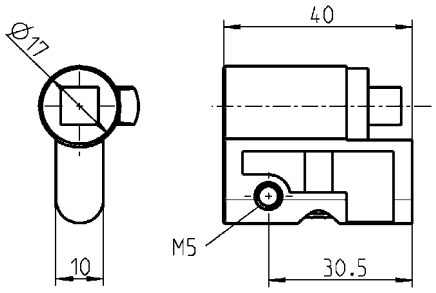

Push button-profile half cylinder

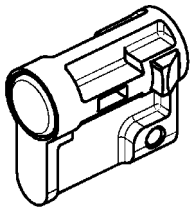

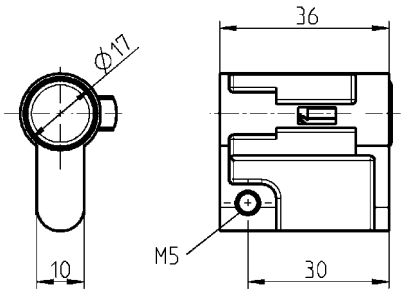

Radial pin-push half cylinder

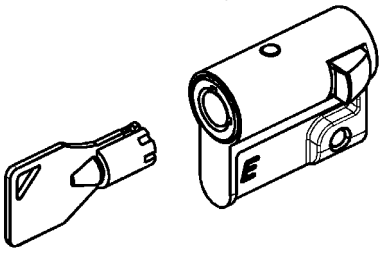

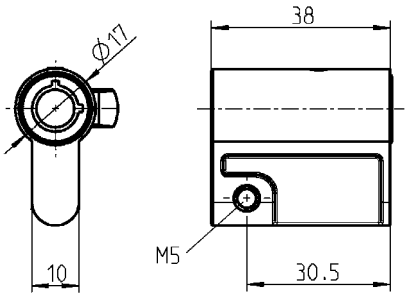

Blind plug

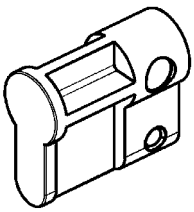

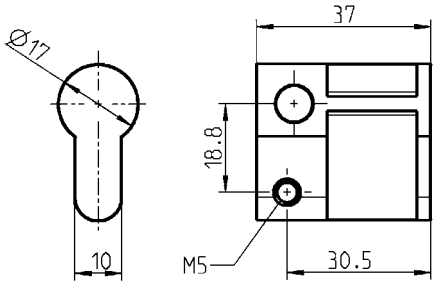

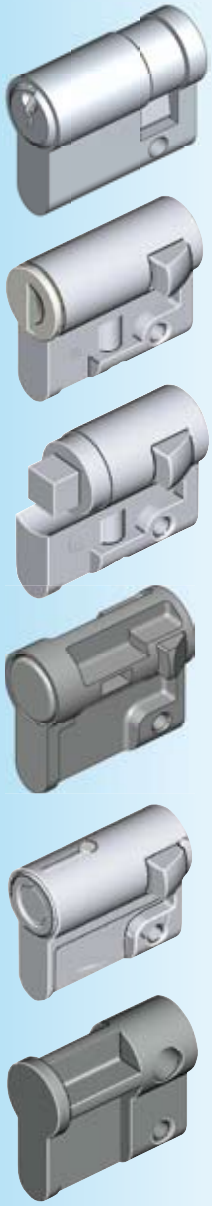

Further parts see page

– Key	12B-120
– Spare key	12B-140
– Locking set	3XC-120
Program 1107	
– Swinghandle	3A-120
up to	3A-320
Program 1125	
– Swinghandle	3B-220
	3B-420
Program 1150	
– Swinghandle 1153	3C-320
Swinghandle 1154	3C-220
	3C-260
Program 1190	
– Swing handle	3F-330
Program 1225	
– Swinghandle	3G-220
Program 1317	
– Swinghandle	3AB-120
	3AB-140
Program 1325	
– Swinghandle	3BA-220

Push button profile half cylinder polyamide GF black	
	1109-U59
Radial pin-push cylinder zinc die Chrome plated, spring loaded	
keyed 20001	1109-U60
keyed different	1109-U61
Spare key 20001	1108-U52
Spare key keyed different	1108-U52-V
Blind plug polyamide black, spring loaded ball m.s. blacked	
with spring loaded ball	1109-U3
without spring loaded ball	1109-09-AA

© EMKA Beschlagteile GmbH & Co. KG • 2016 • www.emka.com

EMKA®

Beschlagteile

Profile half cylinder

PROGRAM 1125, 1225, 1317

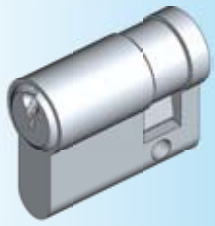

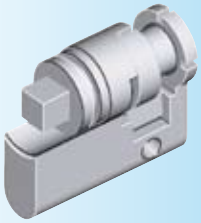

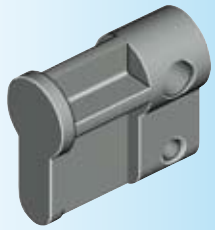

Profile half cylinder according to DIN 18 252 (EN 1303)

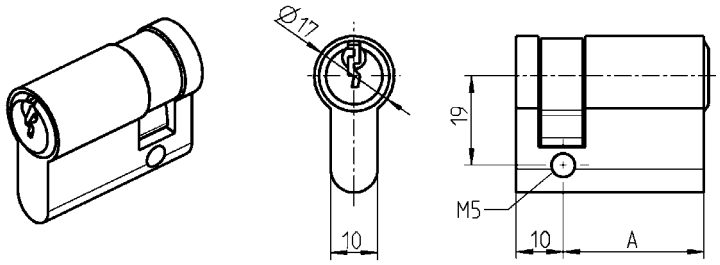

Profile half cylinder acc. to DIN 18 252 brass nickel plated with 3 keys; Catch can be set at every 45°		
keyed different	A = 30	1089-U1
keyed 110319 N	A = 30	1089-U2
(Master key system on request)		

EMKA profile cylinder
with round cylinder
360° turn

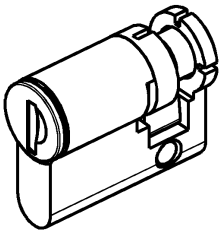

EMKA profile half cylinder
with insert
360° turn

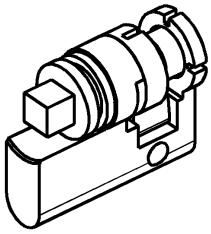

EMKA profile half cylinder with round cylinder zinc die with stainless steel cap and shutter with one key silver steel with grip polyamide GF black, turn 360°.	
keyed different or keyed EK 333	on request
EMKA profile half cylinder with insert zinc die chrome pl., rotates 360°.	
Inserts, e.g. square, triangular, double bit, slotted and more	on request

Blind plug

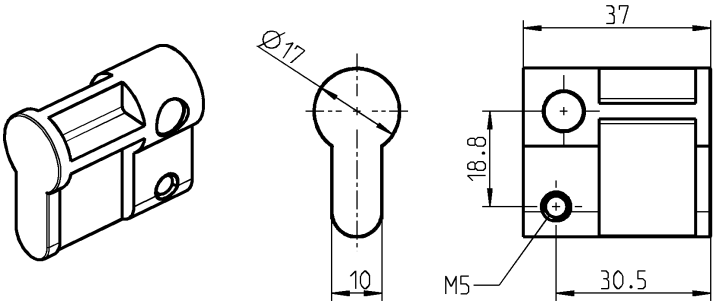

Blind plug polyamide GF black	
	1109-09-AA

Note:
For the swinghandles 1225-U60 (3G-320) only the profile half cylinders 1089-U1 or 1089-U2 can be used!

Further parts see page

– Key	12B-120
– Spare key	12B-140
Program 1125	
– Swinghandle	3B-320
Program 1225	
– Swinghandle	3G-320
Program 1317	
– Swinghandle	3AB-160

© EMKA Beschlagteile GmbH & Co. KG • 2016 • www.emka.com

Profile half cylinder

PROGRAM 1150, 1190

Profile cylinder according to DIN 18252 (EN 1303)

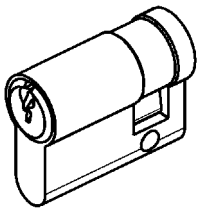

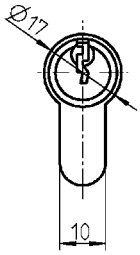

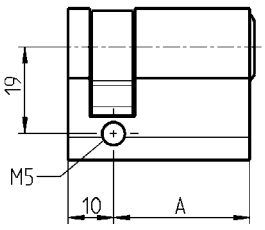

Profile half cylinder according to DIN 18 252 brass nickel plated with 3 keys Cam can be turned every 45°		
keyed different	A = 30	1089-U1
keyed 110319 N	A = 30	1089-U2
(Available as master key system)		

EMKA profile half cylinder

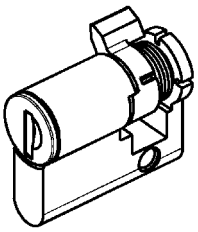

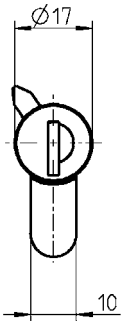

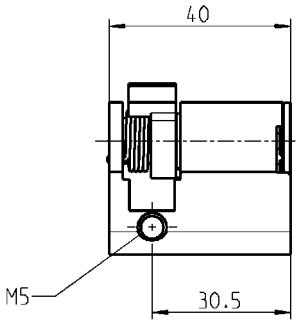

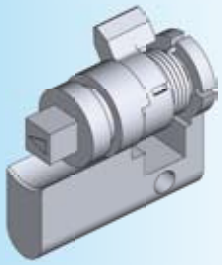

EMKA profile half cylinder with round cylinder zinc die with stainless steel cap and dust cap, key only removable in locked position, spring loaded return of catch into locked position. Each round cylinder has one silver steel key with polyamide grip GF black.	
keyed different	1109-U50-01
keyed EK 333	1109-U51-01
EMKA profile half cylinder with insert zinc die chrome plated, spring loaded return of catch into locked position.	
Square 6	1109-U18-01
Square 7	1109-U19-01
Square 8	1109-U20-01
Square 8 slotted	1109-U21-01
Triangular 6,5 CNOMO	1109-U22-01
Triangular 7	1109-U23-01
Triangular 8	1109-U24-01
Triangular 9	1109-U25-01
Triangular 10	1109-U26-01
Double bit 3	1109-U34-01
Double bit 5	1109-U35-01
Hexagon female 10	1109-U27-01
Square female 6	1109-U28-01
Square female 8	1109-U29-01
Daimler Benz	1109-U30-01
Slot 1,2 x 3	1109-U31-01
Slot 2 x 4	1109-U32-01
Crown type	1109-U33-01
Eastern Europe Ø 13	1109-U58-01

Further parts see page
– Key 12B-120
– Spare key 12B-140
Program 1150
– Swinghandle 1154 3C-280
Program 1190
– Swinghandle 3F-430

© EMKA Beschlagteile GmbH & Co. KG • 2016 • www.emka.com

EMKA®

Beschlagteile

Notes:

Locking sets

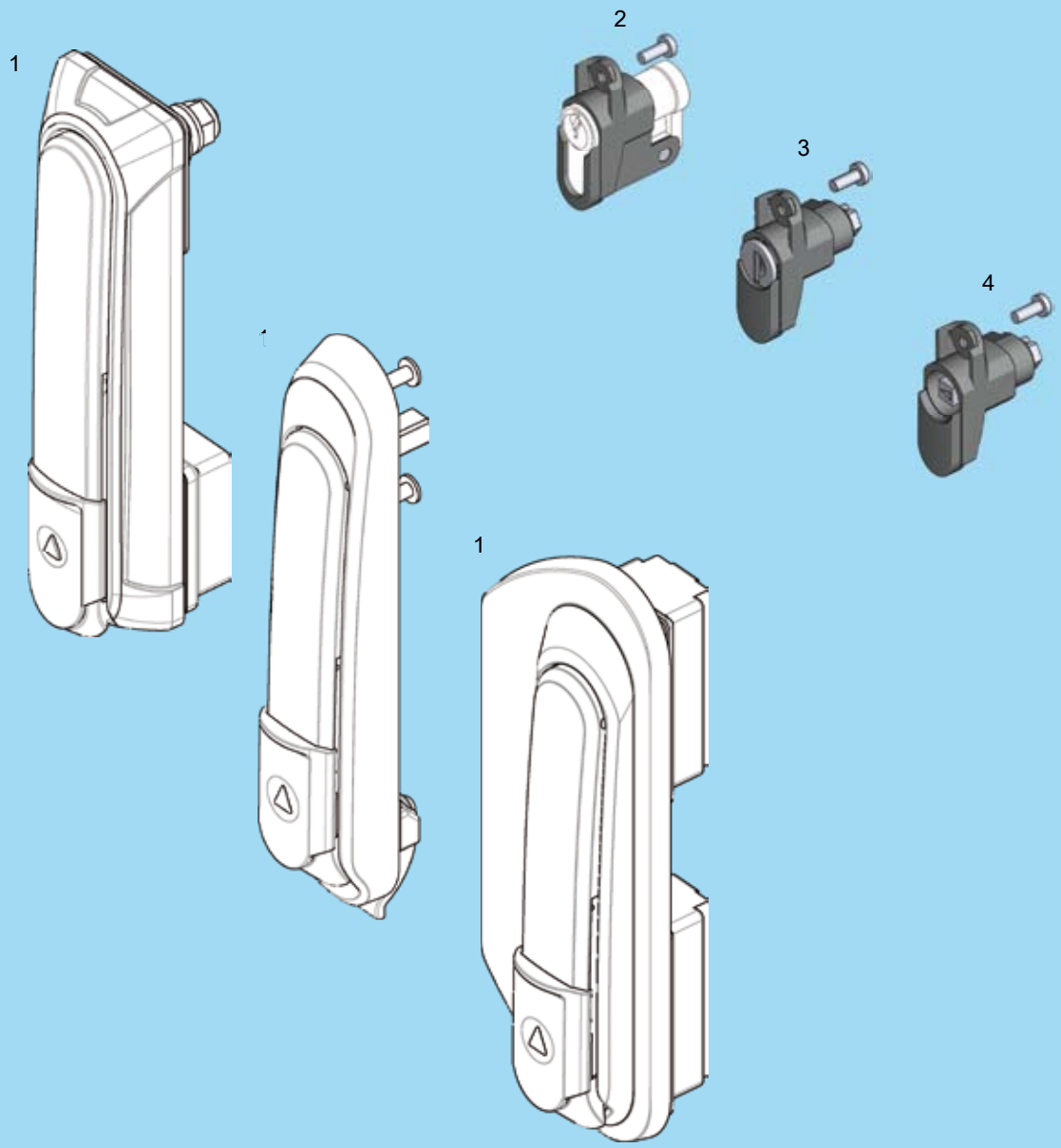

1 Swing handle Program 1317, 1325
2 Locking set for profile half cylinder DIN 18252
3 Locking set with round cylinder
4 Locking set with insert

EMKA®

Beschlagteile

New locking set series

PROGRAM 1317, 1325

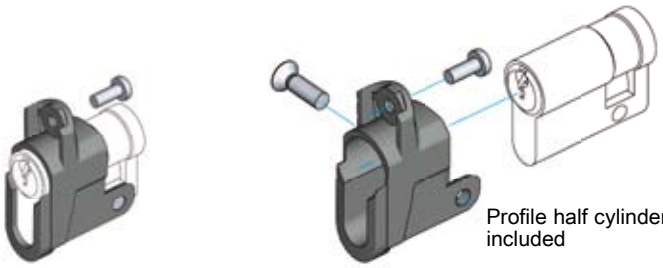

(1) (In case of profile half cylinder the catch has to be set at 90°)

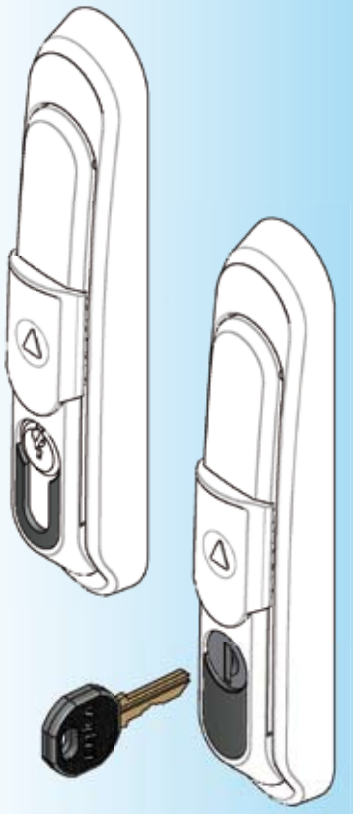

Locking set polyamide GF black; screws m.s. zinc plated	
for 40 mm profile half cylinder (A = 30 mm) (1)	1109-U101

Locking set polyamide GF black; round cylinder GD-Zn with stainless steel cap and shutter; screws m.s. zinc plated. Each round cylinder has one nickel silver key with polyamide grip GF black.	
keyed EK 333	1109-U103
keyed different	1109-U104
Assembly of swinghandle and locking set on request	
	1109-990

Locking set polyamide GF black; insert zinc die Chrome plated, screws m.s. zinc plated	
Square 6	1109-U105
Square 7	1109-U106
Square 8	1109-U107
Square 8 slotted	1109-U108
Triangular 6.5 CNOMO	1109-U109
Triangular 7	1109-U110
Triangular 8	1109-U111
Triangular 9	1109-U112
Triangular 10	1109-U113
Double bit 3	1109-U114
Double bit 5	1109-U115
Hexagon female 10	1109-U116
Square female 6	1109-U117
Square female 8	1109-U118
Daimler Benz	1109-U119
Slot 1.2 x 3	1109-U120
Slot 2 x 4	1109-U121
Crown type	1109-U122
Eastern Europe Ø 13 half-round	1109-U123
Assembly of swinghandle and locking set on request	
	1109-990

Further parts see page
– Profile half cylinder 3XB-120
(Blind plug without spring loaded ball not usable)

– Key 12B-120
– Spare key 12B-140

Program 1317
– Swinghandle 3AB-140

Program 1325
– Swinghandle 3BA-220
3BA-320

© EMKA Beschlagteile GmbH & Co. KG • 2016 • www.emka.com

Rod control
Program 1125, 1150, 1225, 1325, 2100, 3000

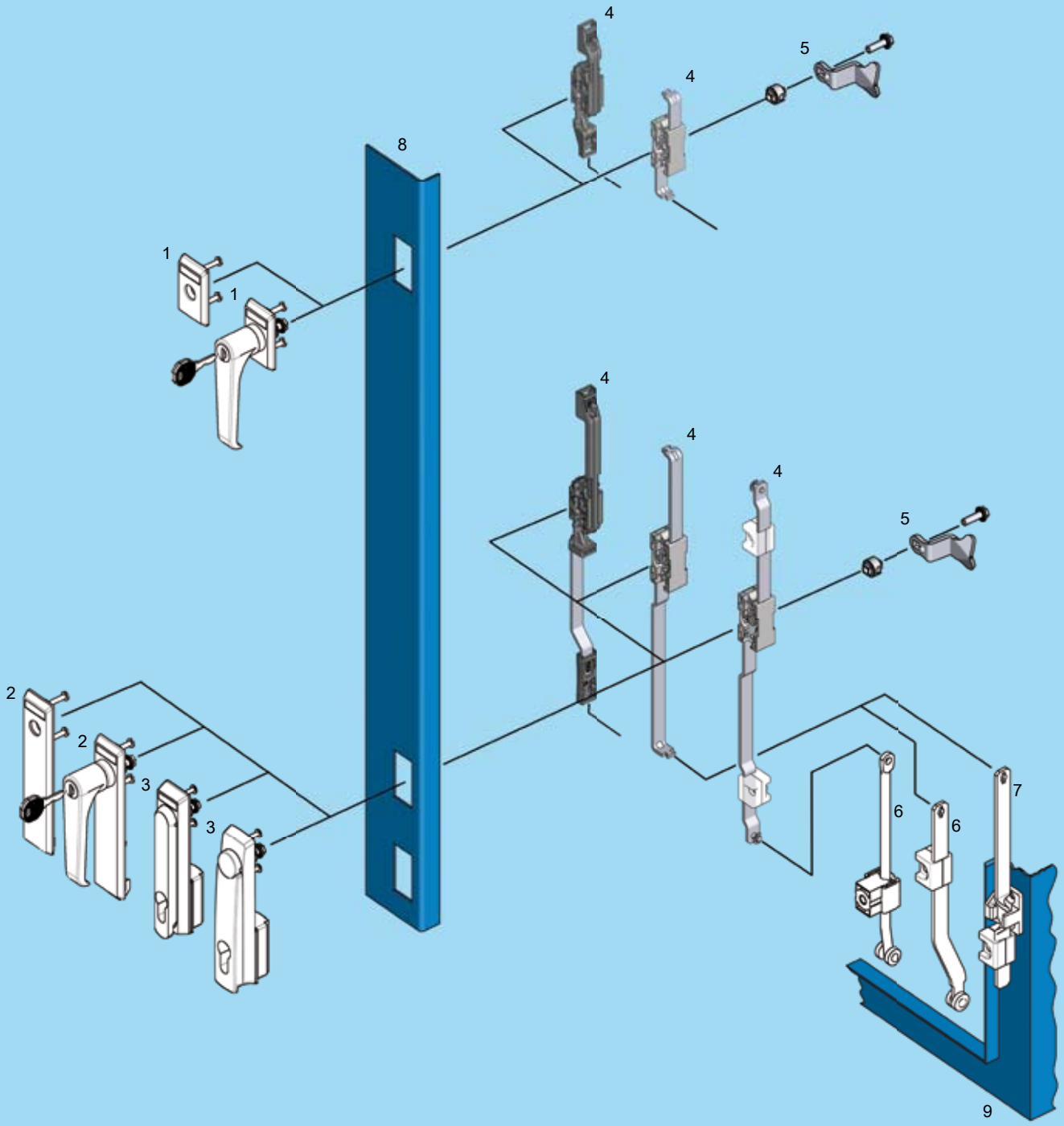

1	Escutcheon short	**Program 1125, 1225**
2	Escutcheon long	**Program 1125, 1225, 1325, 2100**
3	Swinghandle	**Program 1125, 1150, 1225, 1325, 2100, 3000**
4	Rod control	3YA-110 to 3YA-540
5	Cam	3YA-820, 3YA-840
6	Rod (inside the gasketing)	
7	Rod (outside the gasketing)	
8	Door	
9	Cabinet/frame	

EMKA®

Beschlagteile

Rod control for flat rods

PROGRAM 1125, 1150, 1225, 1325, 3000

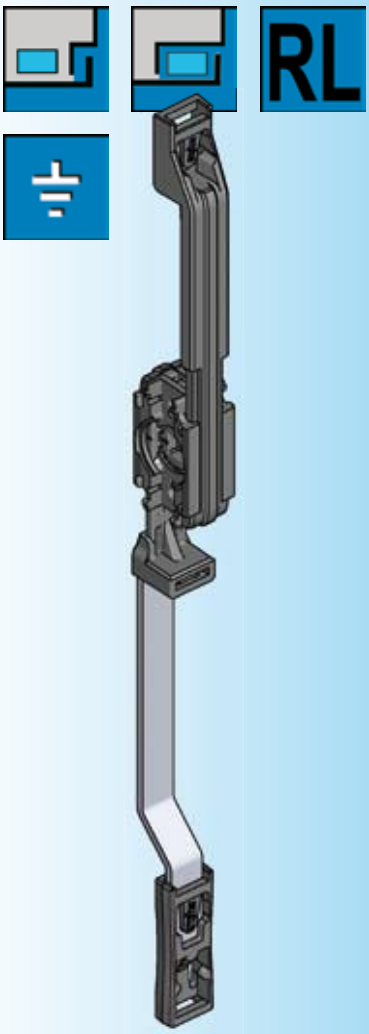

Quick assembly of the rod

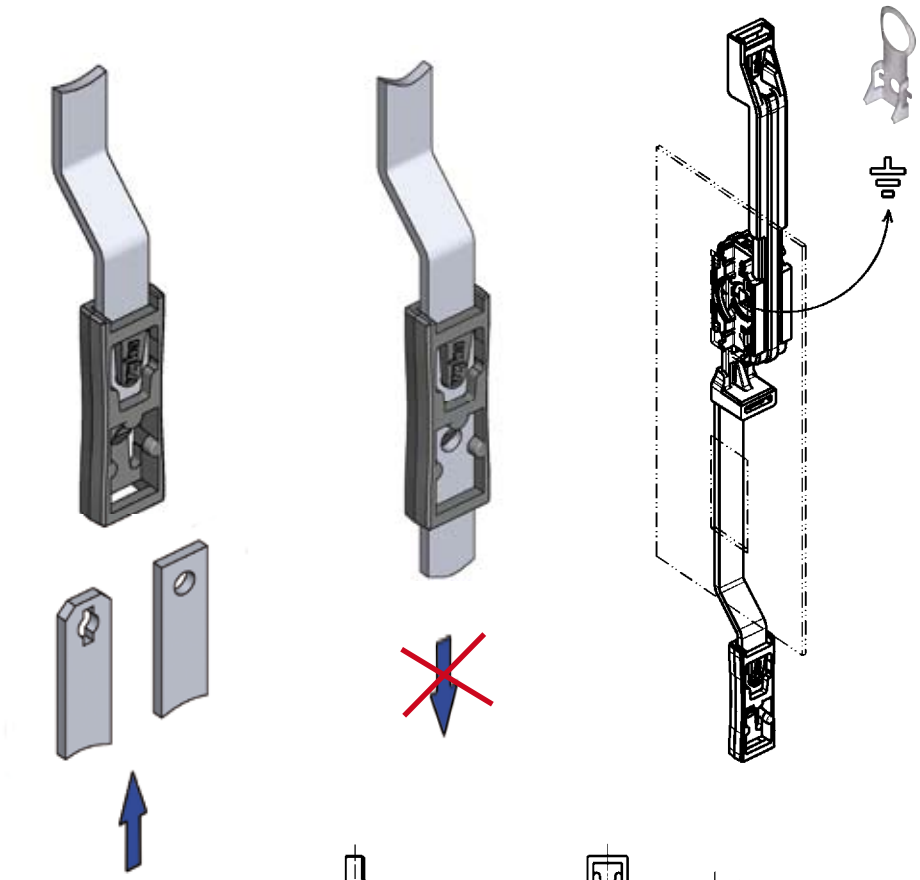

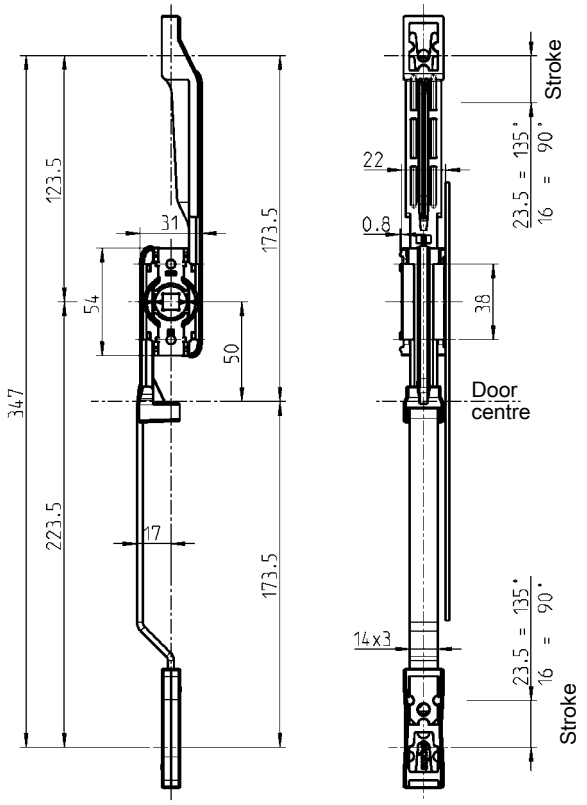

Further parts see page

– Rods

outside	3ZA-120
inside (only flat rods possible)	3ZB-120
	3ZB-200
	3ZB-220
– Earthing device	3YA-720
– Cam	3YA-820
(Swing handle 1325)	3YA-840

Program 1125

– Escutcheon long	3B-120
	3B-180
– Swinghandle	3B-220
	3B-420

Program 1150

– Swinghandle 1150	3C-160
	3C-720
up to	3C-750
– Swinghandle 1153	3C-320

Program 1225

– Escutcheon long	3G-120
	3G-180
– Swinghandle	3G-220
	3G-420

Program 1325

– Escutcheon	3BA-120
– Swinghandle	3BA-220

Program 3000

– Swinghandle	3N-120

Rod control made of high performance plastics

1121-U26-K

© EMKA Beschlagteile GmbH & Co. KG • 2016 • www.emka.com

Rod control for flat rods

PROGRAM 1125, 1225

Quick assembly of the rod

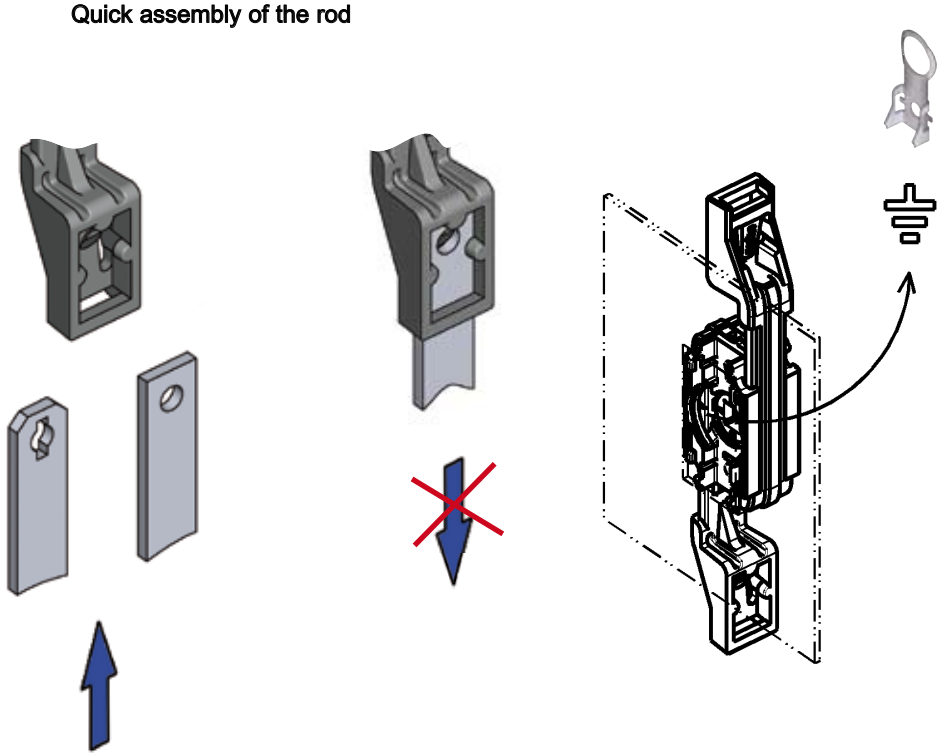

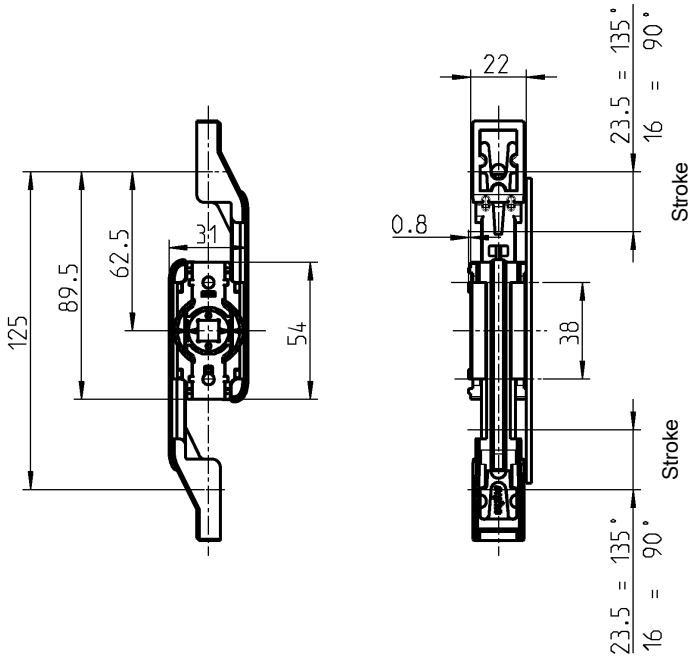

Further parts see page

– Rods

inside (only flat rods possible) 3ZB-120
3ZB-200
3ZB-220

– Earthing device 3YA-720

– Cam 3YA-820

Program 1125

– Escutcheon short 3B-120
3B-180

Program 1225

– Escutcheon short 3G-120
3G-180

Rod control made of high performance plastics

1121-U1-K

© EMKA Beschlagteile GmbH & Co. KG • 2016 • www.emka.com

EMKA®

Beschlagteile

Rod control for flat rods

PROGRAM 1125, 1150, 1225, 1325, 3000

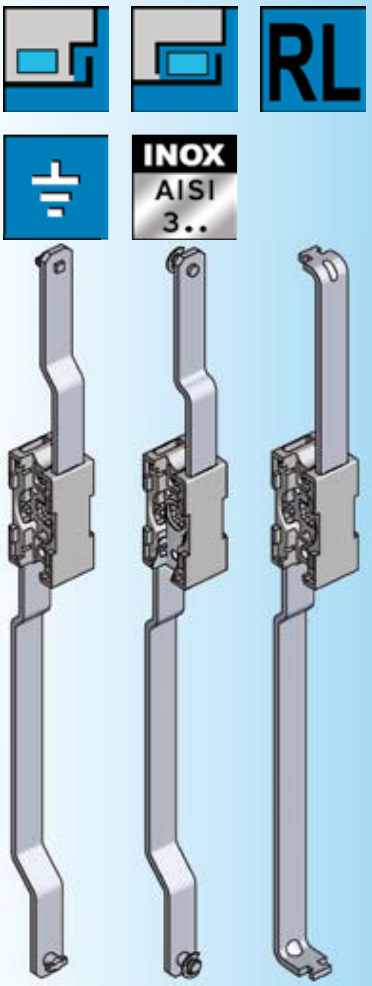

EDELSTAHL Rost frei STAINLESS STEEL

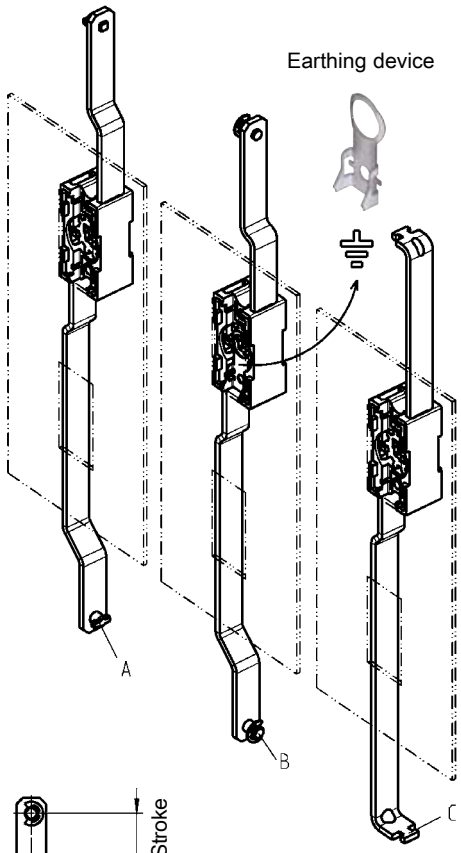

X = 27 mm zinc die and polyamide
29 mm AISI

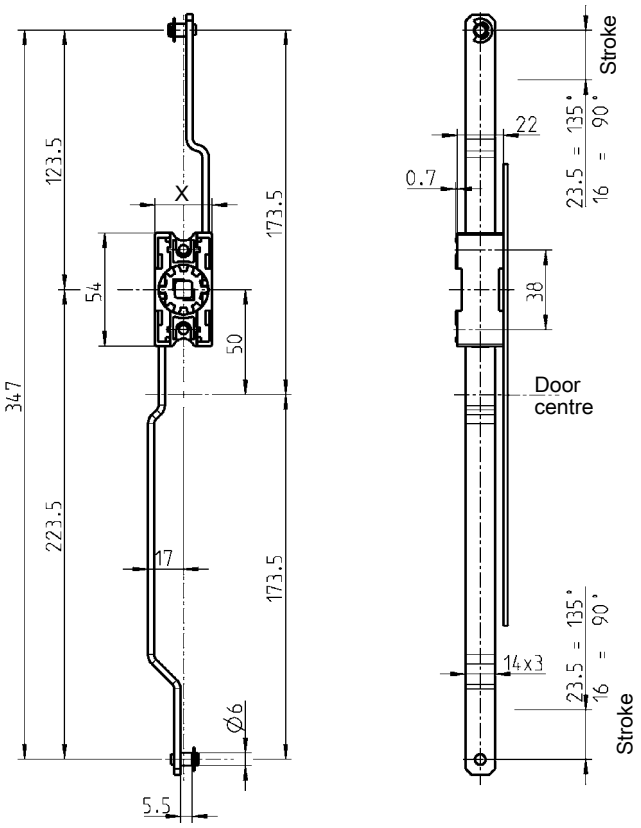

Further parts see page

– Rods

outside	3ZA-120
inside (only flat rods possible)	3ZB-120
	3ZB-200
	3ZB-220
– Earthing device	3YA-720
– Cam	3YA-820
(Swing handle 1325)	3YA-840

Program 1125

– Escutcheon long	3B-120
	3B-180
– Swinghandle	3B-220
	3B-420

Program 1150

– Swinghandle 1150	3C-160
	3C-720
up to	3C-750
– Swinghandle 1153	3C-320

Program 1225

– Escutcheon long	3G-120
	3G-180
– Swinghandle	3G-220
	3G-420

Program 1325

– Escutcheon	3BA-120
– Swinghandle	3BA-220

Program 3000

– Swinghandle	3N-110
up to	3N-130

Rod control: Material on choice

Rod control box	Rod	Version A	Version B	Version C
Zinc die	m.s. zinc plated	1121-U125-C	1121-U26-C	1121-U85-C
polyamide black	AISI 304	–	1121-U178-C	–
polyamide black	aluminium	–	1121-U38-C	1121-U86-C
AISI 316	AISI 304	–	1121-U139	–

© EMKA Beschlagteile GmbH & Co. KG • 2016 • www.emka.com

Rod control for round rods

PROGRAM 1125, 1150, 1225, 1325, 3000

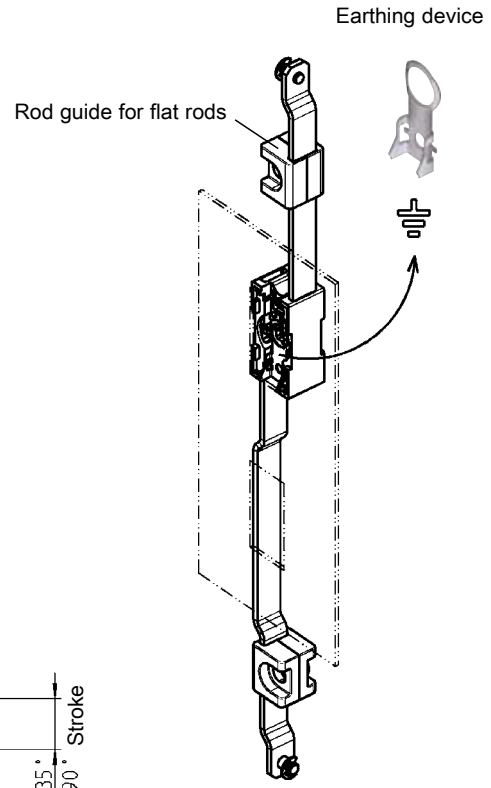

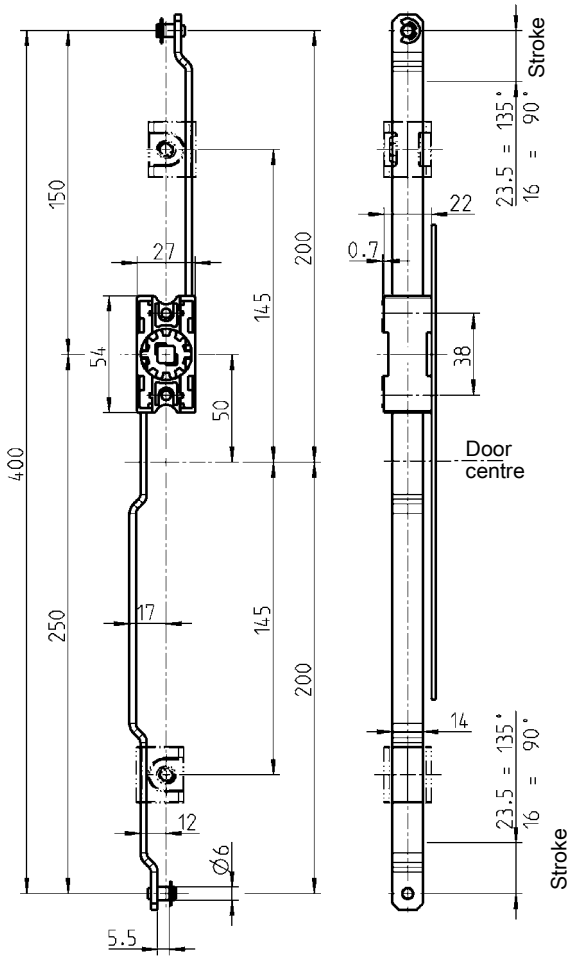

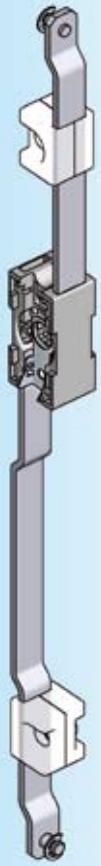

Further parts see page

– Rods	
inside	3ZB-120
– Rod guide	3ZC-120
up to	3ZC-170
– Earthing device	3YA-720
– Cam	3YA-820
(Swing handle 1325)	3YA-840
Program 1125	
– Escutcheon long	3B-120
	3B-180
– Swinghandle	3B-220
	3B-420
Program 1150	
– Swinghandle 1150	3C-160
	3C-720
up to	3C-750
– Swinghandle 1153	3C-320
Program 1225	
– Escutcheon long	3G-120
	3G-180
– Swinghandle	3G-220
	3G-420
Program 1325	
– Escutcheon	3BA-120
– Swinghandle	3BA-220
Program 3000	
– Swinghandle 1150	3N-110
up to	3N-130

Rod control material on choice		
Rod control box	**Rod**	
Zinc die	m.s. zinc plated	1121-U29-C
polyamide black	aluminium	1121-U39-C

© EMKA Beschlagteile GmbH & Co. KG • 2016 • www.emka.com

EMKA®

Beschlagteile

Rod control

PROGRAM 1125, 1225

EDELSTAHL Rost frei STAINLESS STEEL

INOX AISI 3..

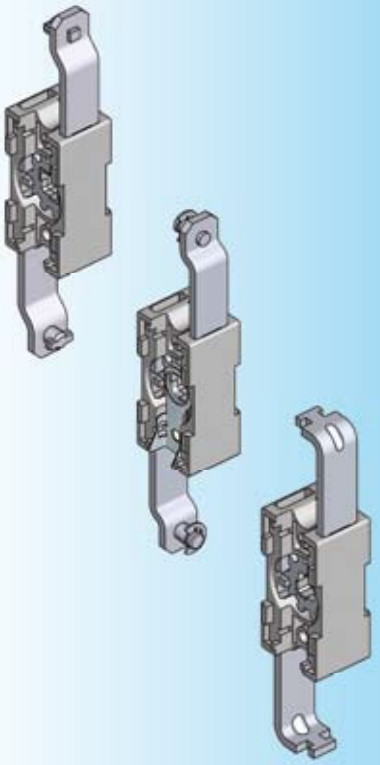

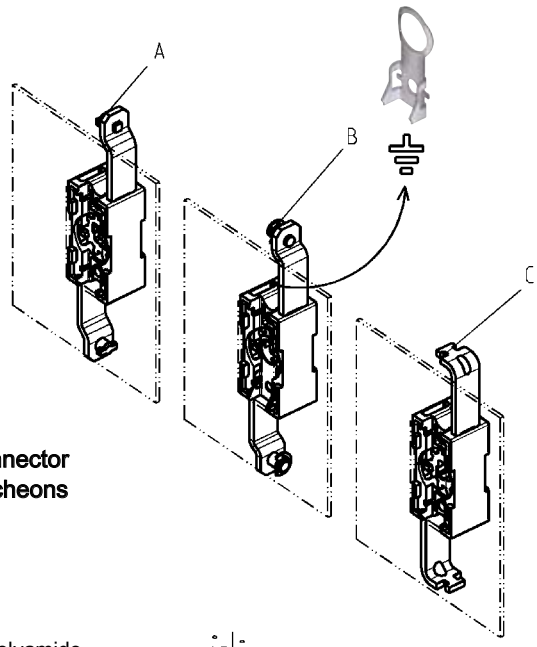

Rod control for short escutcheons
Version B in combination with connector (3YA-180) suitable for long escutcheons and swinghandles

X = 27 mm zinc die and polyamide
29 mm AISI

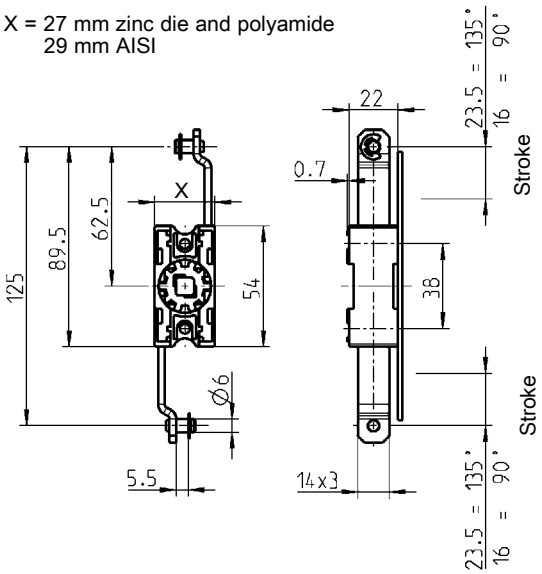

Further parts see page

– Rods	
inside	3ZB-120 3ZB-200 3ZB-220
– Bridge	3YA-180
– Earthing device	3YA-720
– Cam	3YA-820
Program 1125	
– Escutcheon short	3B-120 3B-180
Program 1225	
– Escutcheon short	3G-120 3G-180
– Swinghandle small version	3G-520

Rod control with two rods: Material on choice				
Rod control box	Rod	Version		
		A	B	C
Zinc die	m.s. zinc plated	1121-U124-C	1121-U1-C	1121-U153-C
polyamide black	AISI 304	–	1121-U177-C	–
polyamide black	aluminium	–	1121-U37-C	1121-U154-C
AISI 316	AISI 304	–	1121-U138	–
Rod control with one rod				
Rod control box	Rod	Version		
		A	B	C
polyamide black	aluminium	–	1121-U61-C	–
Rod control without rods, with swing stopper aluminium, turn 90°				
Rod control box	Rod	Version		
		A	B	C
polyamide black	–	–	1121-U60-C	–

© EMKA Beschlagteile GmbH & Co. KG • 2016 • www.emka.com

Connector for smaller width

PROGRAM 1125, 1225, 1325

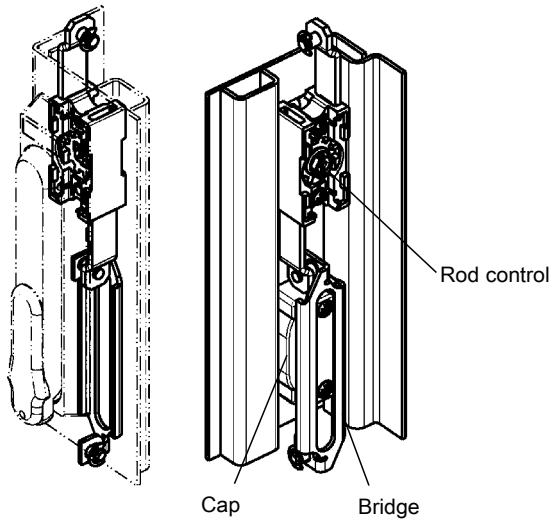

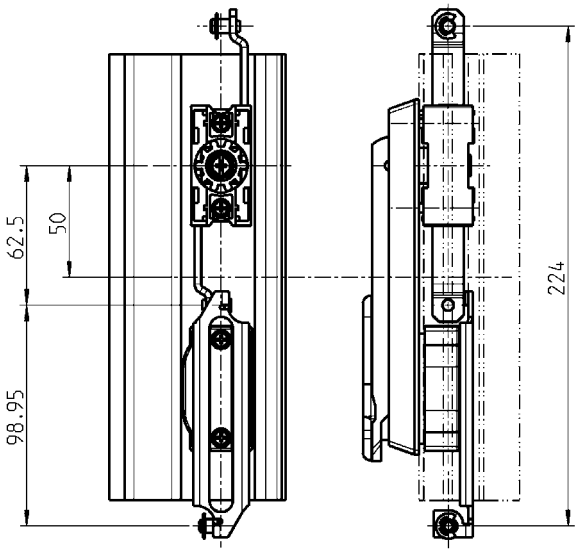

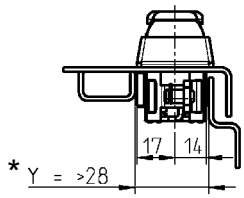

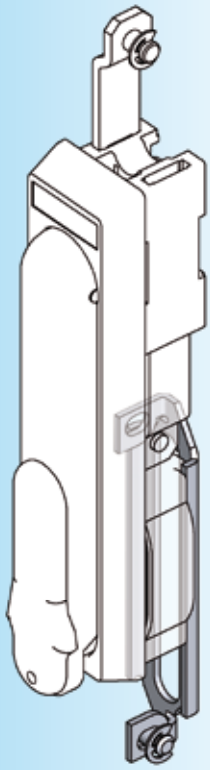

By using the connector in combination with a rod control 3YA-160) version B, less width is required. In case of mounting the long escutcheon or the swing handles, each with cap, the rod length above and below is the same.

* In case of a smaller dimension Y rear cap with flat seal (without PUR-foamed seal) has to be ordered separately on request.

Further parts see page

– Rods	
inside	3ZB-120
	3ZB-200
	3ZB-220
– Rod control (Version B)	3YA-160
Program 1125	
– Escutcheon long	3B-120
	3B-180
– Swinghandle	3B-220
	3B-420
Program 1225	
– Escutcheon long	3G-120
	3G-180
– Swinghandle	3G-220
	3G-420
Program 1325	
– Escutcheon	3BA-120
– Swinghandle	3BA-220

Connector, rivet pin m.s. zinc plated, circlips spring steel zinc plated

1121-U65

© EMKA Beschlagteile GmbH & Co. KG • 2016 • www.emka.com

Rod control for flat rods

PROGRAM 1125, 1225, 1325, 3000

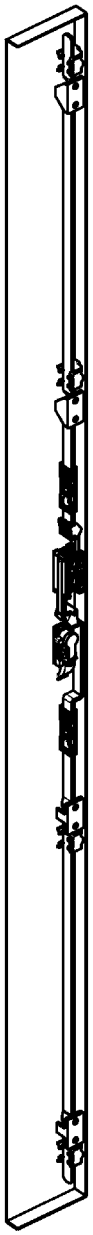

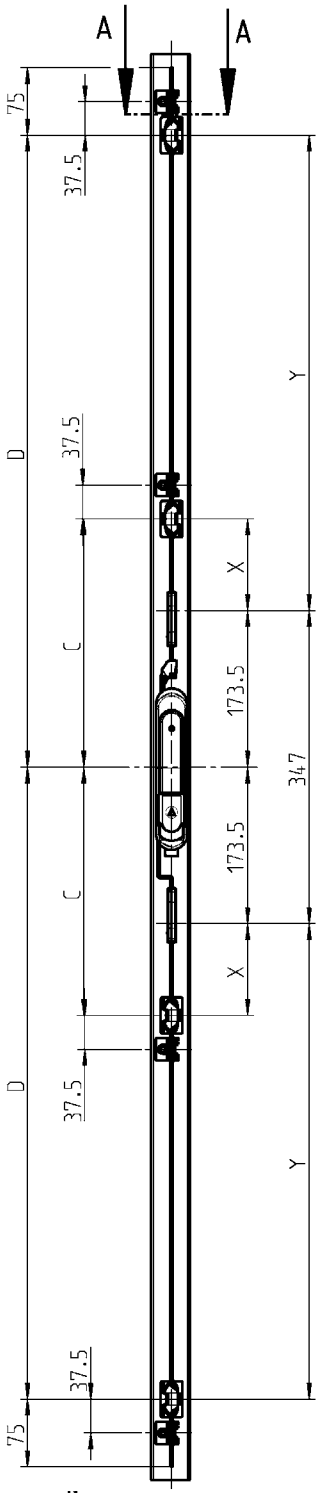

All common locking types can be used.

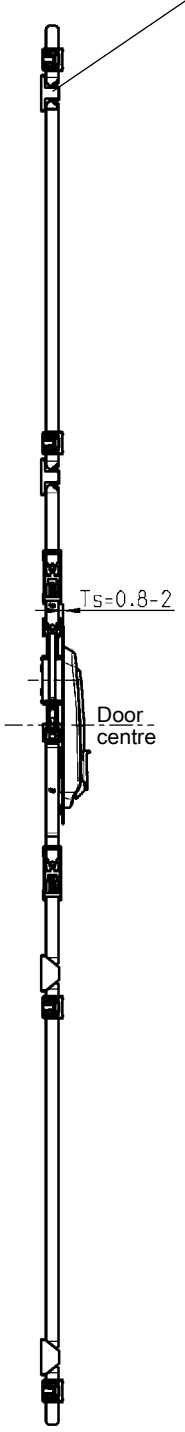

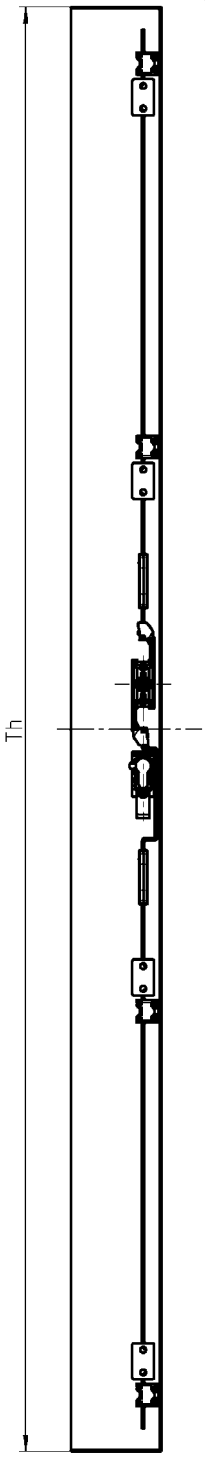

Inside door representation

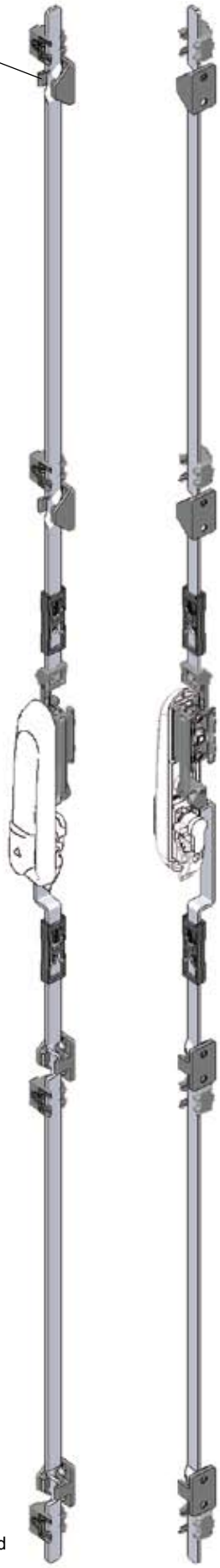

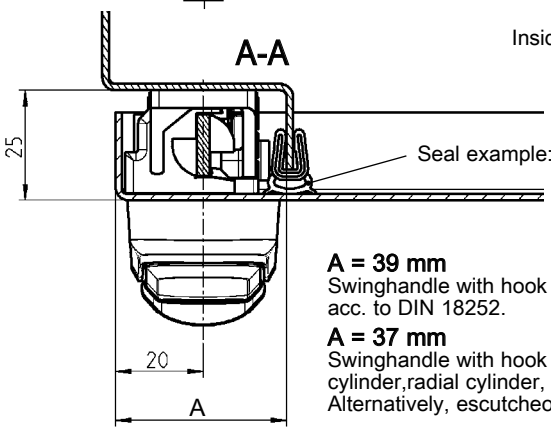

Seal example: 1011-10

A = 39 mm
Swinghandle with hook and profile cylinder acc. to DIN 18252.

A = 37 mm
Swinghandle with hook and EMKA profile cylinder with round cylinder,radial cylinder, insert or button.
Alternatively, escutcheon with hook.

© EMKA Beschlagteile GmbH & Co. KG • 2016 • www.emka.com

Quick assembly of the rod

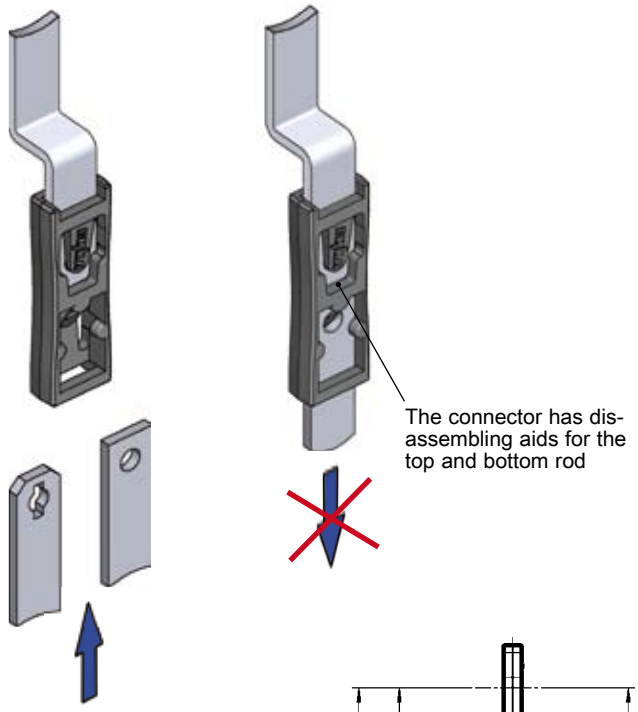

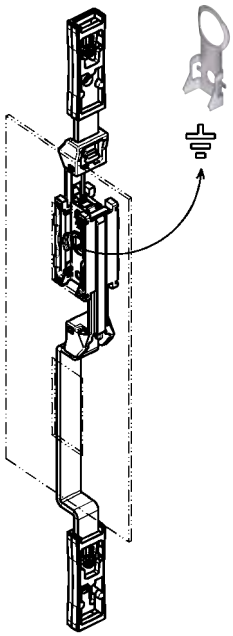

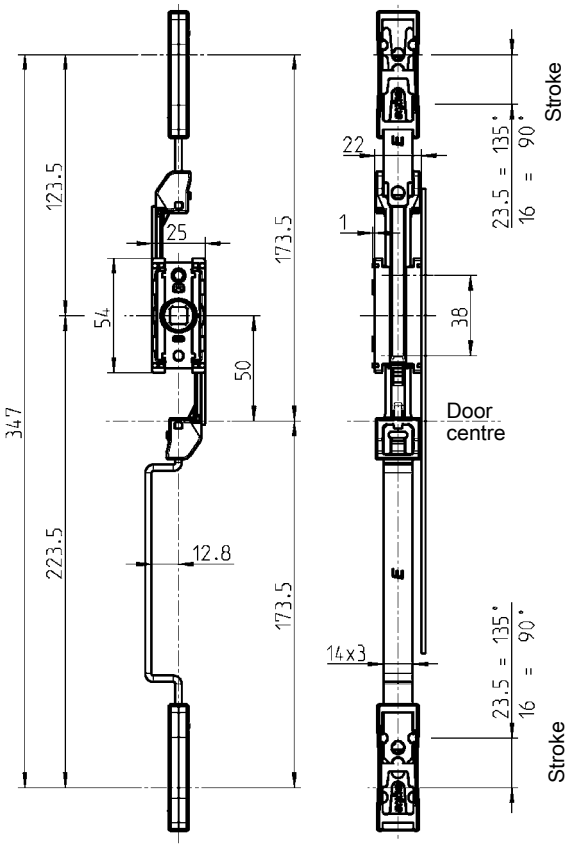

Product benefits

- slim design
- very compact design
- Lock length, rod control and stroke correspond to 1121-U26-K
- saved space of up to 8 mm in the area of door return
- patented!

This rod control can be used in combination with the swinghandles or the escutcheons with hook of the programs 1125, 1225 and 1325.
Swinghandle and escutcheon with cover cannot be used.

Rod control made of high performance plastics; flat rod m.s. zinc plated	
	1122-U26-K
Earthing device stainless steel	
	1122-117

① Note:
Can only be assembled in cut out version A

① Note:
Can only be assembled in certain cut out.
(similar cut out 1125)

Further parts see page
– Rods

outside	3ZA-120
inside (only flat rods possible)	3ZB-120
	3ZB-200
	3ZB-220

Program 1125

– Escutcheon 1121	3B-120
– Escutcheon 1123	3B-180
– Swinghandle	3B-220

Program 1225

– Escutcheon 1221	3G-120
– Escutcheon 1223	3G-180
– Swinghandle	3G-220

Program 1325 ①

– Escutcheon 1321	3BA-120
– Swinghandle	3BA-220

Program 3000 ②

– Swinghandle	3N-110
up to	3N-130

© EMKA Beschlagteile GmbH & Co. KG • 2016 • www.emka.com

EMKA®

Beschlagteile

Rod control for flat rods

PROGRAM 1125

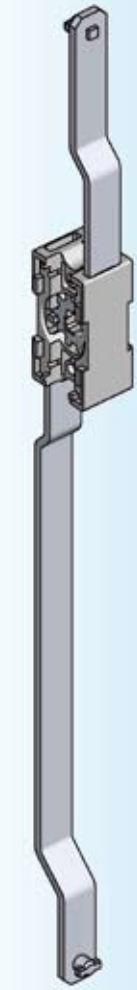

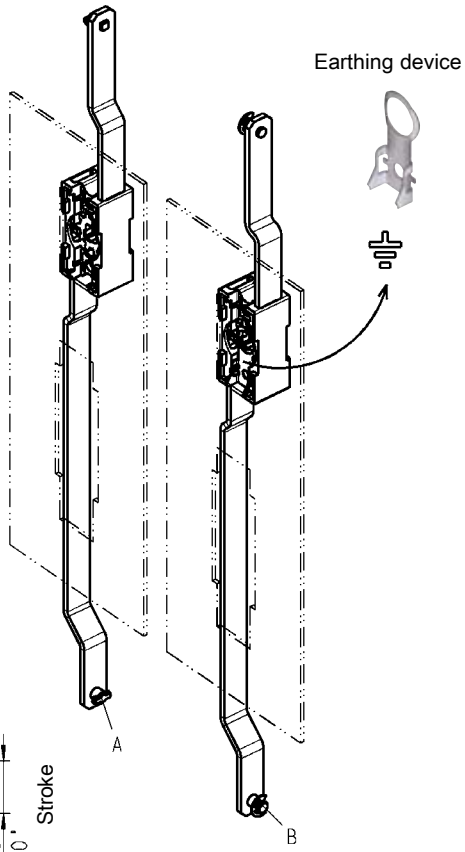

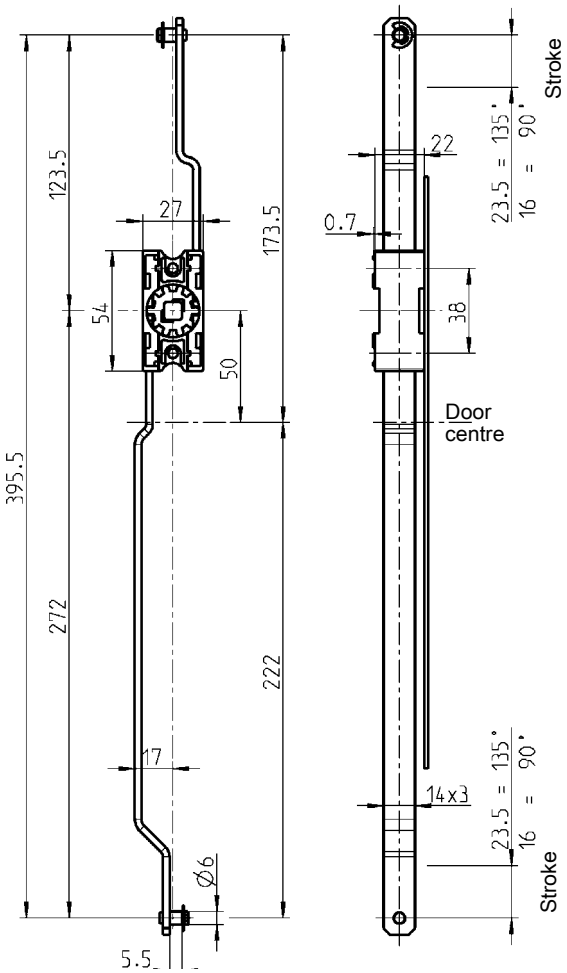

Further parts see page

– Rods

inside	3ZB-120
	3ZB-200
	3ZB-220
– Earthing device	3YA-720
– Cam	3YA-820

Program 1125

– Swinghandle	3B-320

Rod control: Material on choice

Rod control box	Rod	Version A	Version B
Zinc die	m.s. zinc plated	1121-U126-C	1121-U51-C
polyamide black	aluminium	–	1121-U53-C

© EMKA Beschlagteile GmbH & Co. KG • 2016 • www.emka.com

Rod control for round rods

PROGRAM 1125

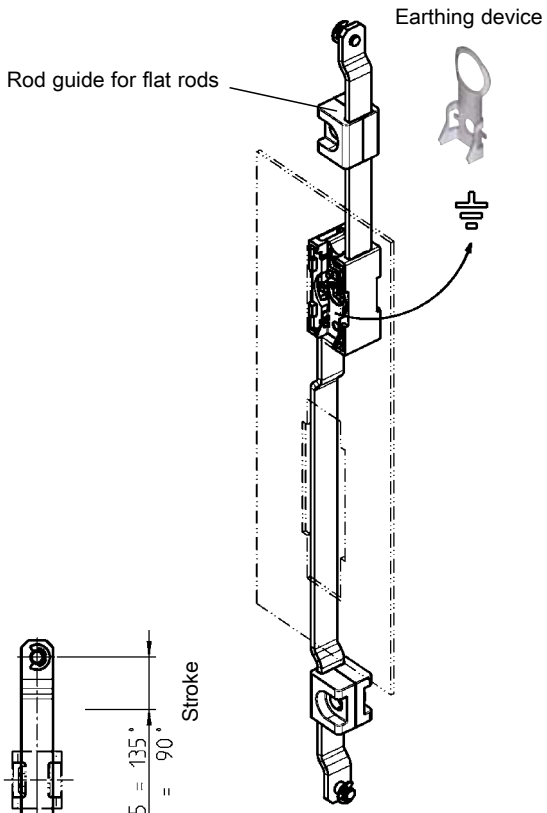

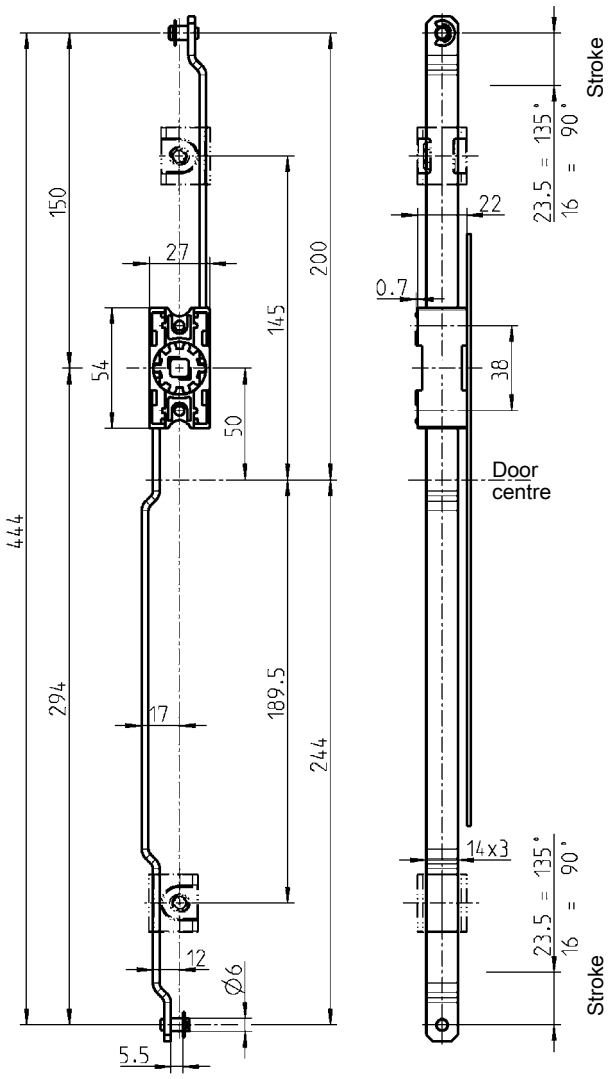

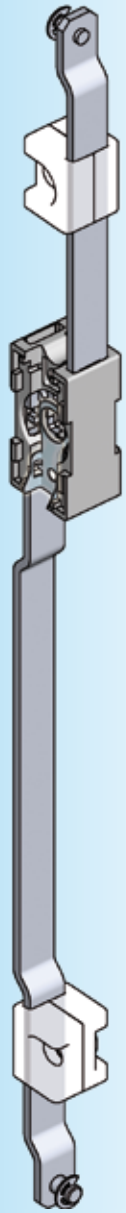

Further parts see page

– Rods		
inside		3ZB-120
– Rod guide		3ZC-120
	up to	3ZC-170
– Earthing device		3YA-720
– Cam		3YA-820

Program 1125

– Swinghandle	3B-320

Rod control zinc die; rods m.s. zinc plated

1121-U52-C

© EMKA Beschlagteile GmbH & Co. KG • 2016 • www.emka.com

EMKA®

Beschlagteile

Rod control for flat rods

PROGRAM 1150

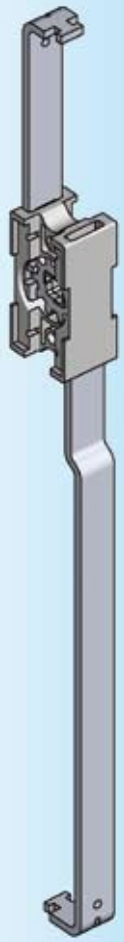

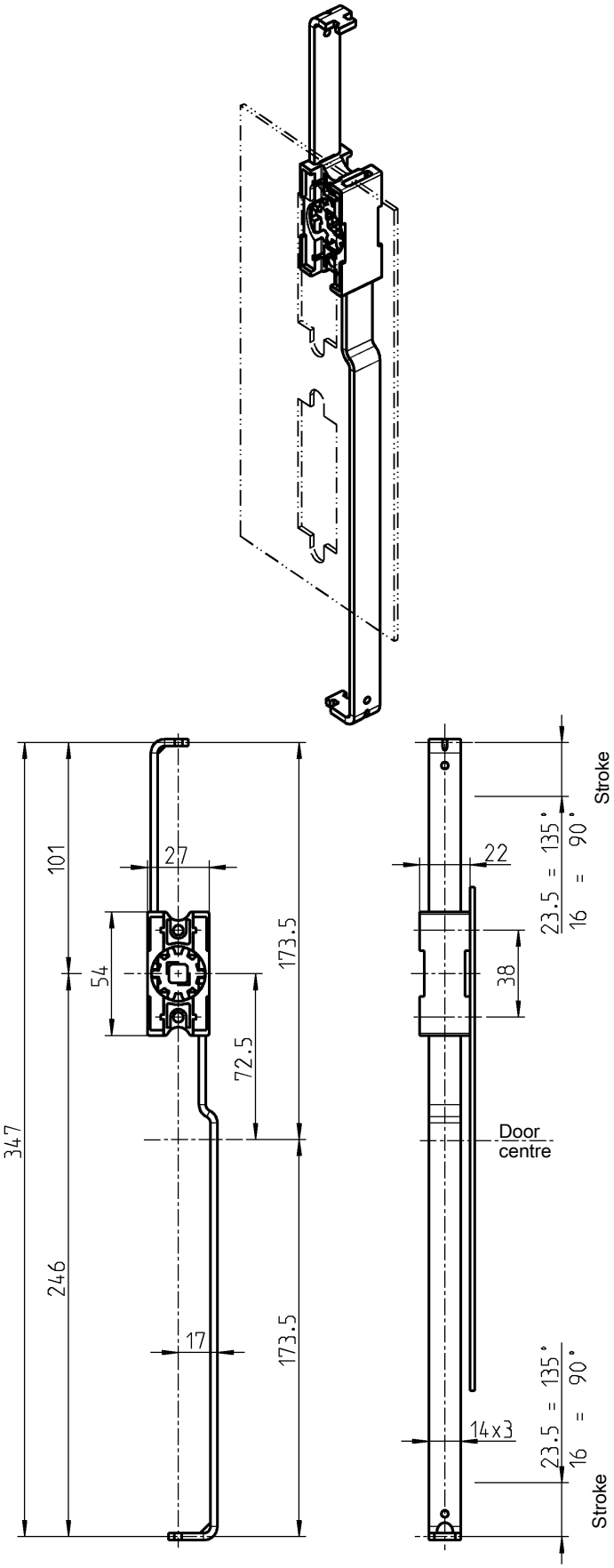

Further parts see page

– Rods

outside	3ZA-120
	3ZA-320
inside	3ZB-120
	3ZB-200
	3ZB-220
– Cam	3YA-820

Program 1150

– Swinghandle 1151	3C-440

Rod control material on choice	
Zinc die, Rods m.s. zinc plated	2121-U28-C
Polyamide black, rods aluminium	2121-U29-C

© EMKA Beschlagteile GmbH & Co. KG • 2016 • www.emka.com

Stainless steel rod control for flat rods

PROGRAM 1150

EDELSTAHL Rost frei STAINLESS STEEL

RL

INOX AISI 3..

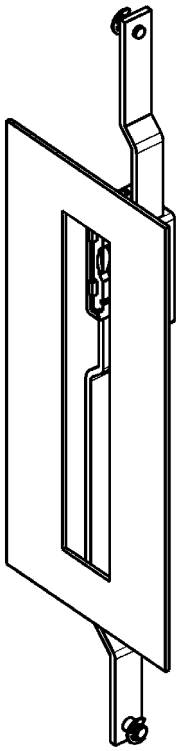

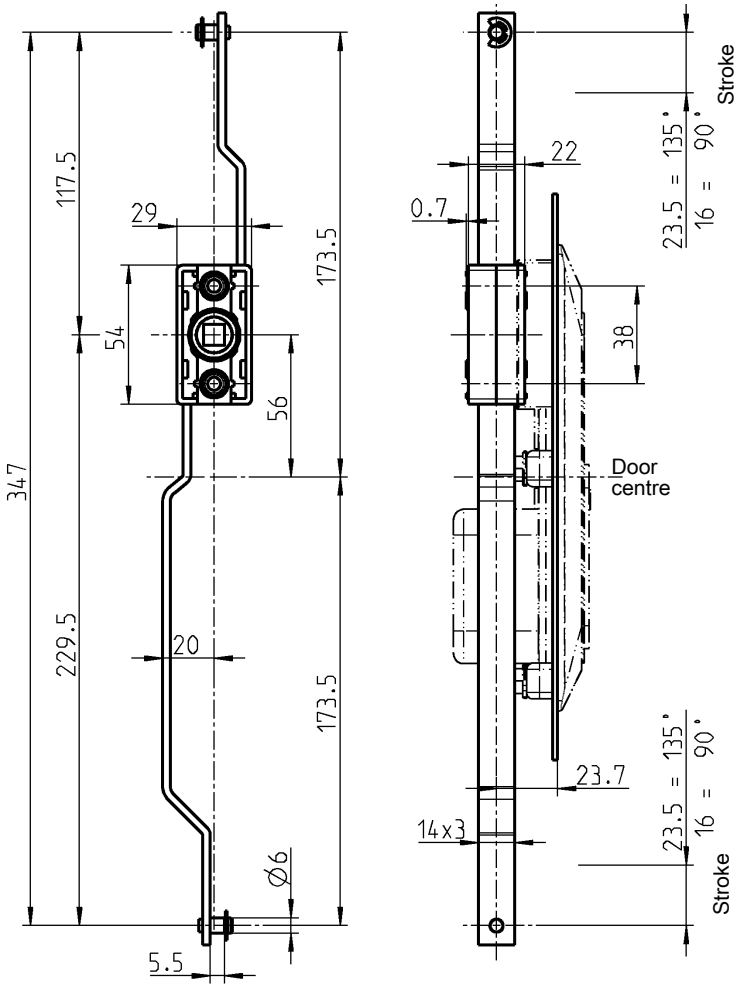

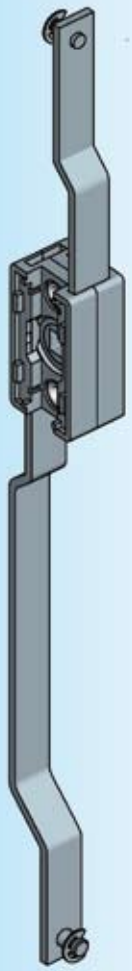

Further parts see page
– Rods
inside on request

Program 1150
– Swinghandle 1154
with RC2 3C-260

Rod control housing AISI 316, rods AISI 304

1121-U140

© EMKA Beschlagteile GmbH & Co. KG • 2016 • www.emka.com

EMKA®

Beschlagteile

Rod control for flat rods

PROGRAM 1180

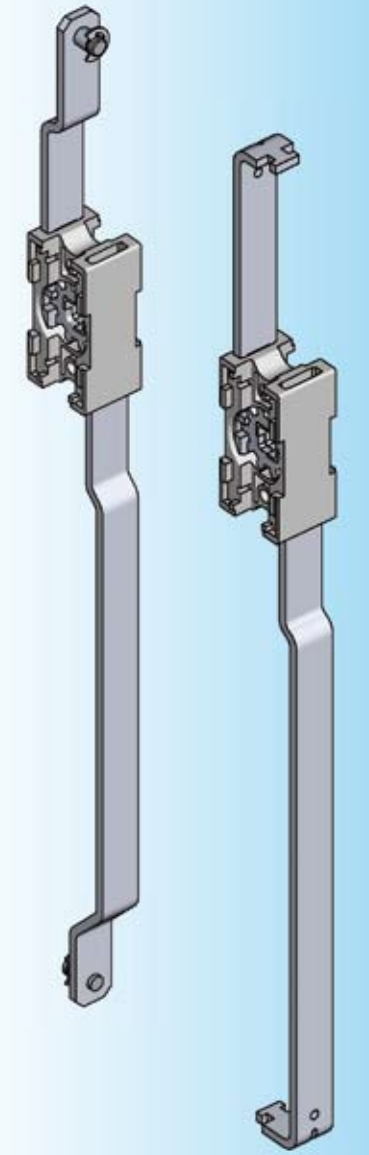

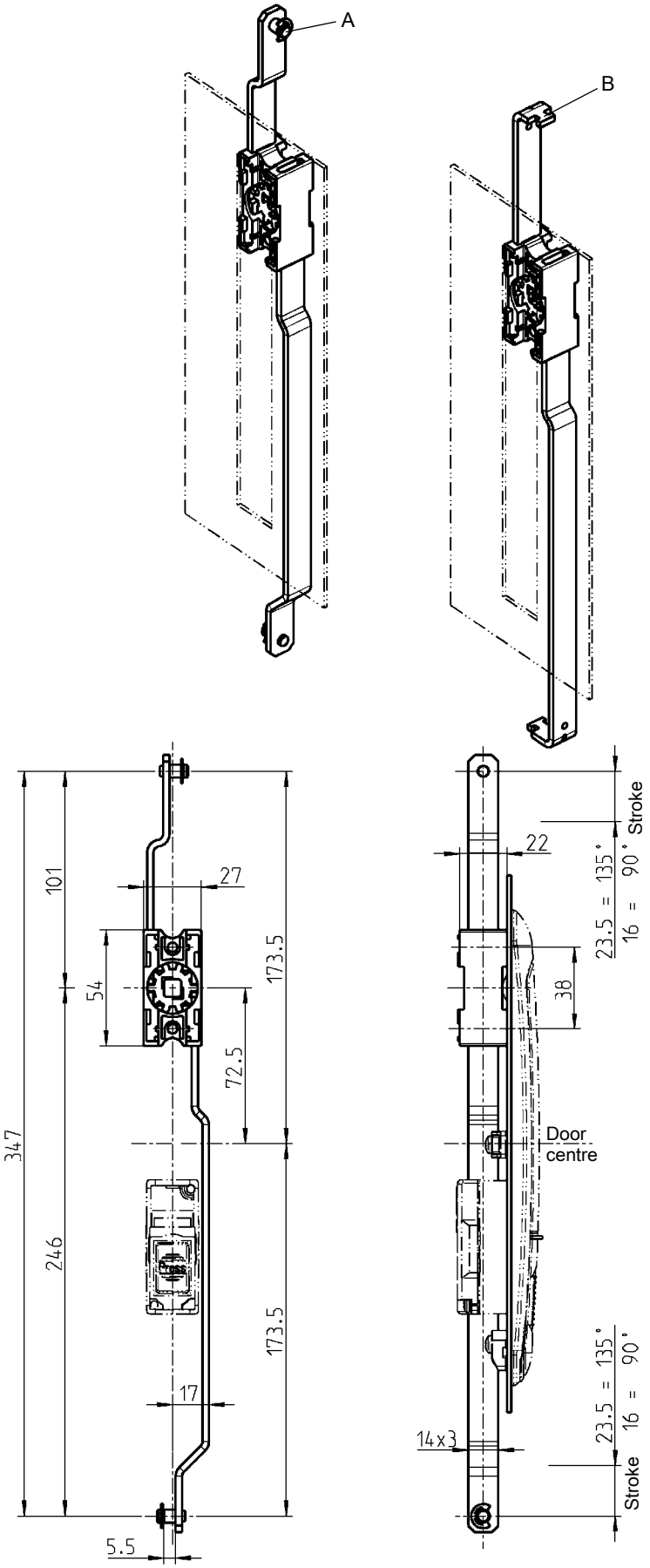

Further parts see page

– Rods

outside	3ZA-120 3ZA-320
inside	3ZB-120 3ZB-200 3ZB-220
– Cam	3YA-820

Program 1180

– Swinghandle 1185	3E-520 3E-540

Rod control zinc die, rods m.s. zinc plated	
Version A	1121-U181-C
Version B	1121-U180-C

© EMKA Beschlagteile GmbH & Co. KG • 2016 • www.emka.com

Rod control for flat rods

PROGRAM 2100

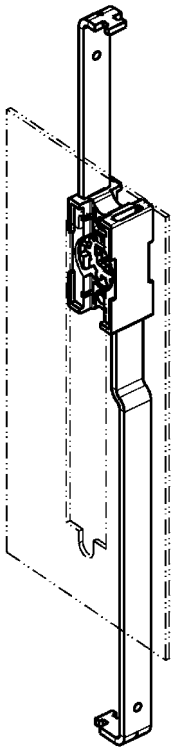

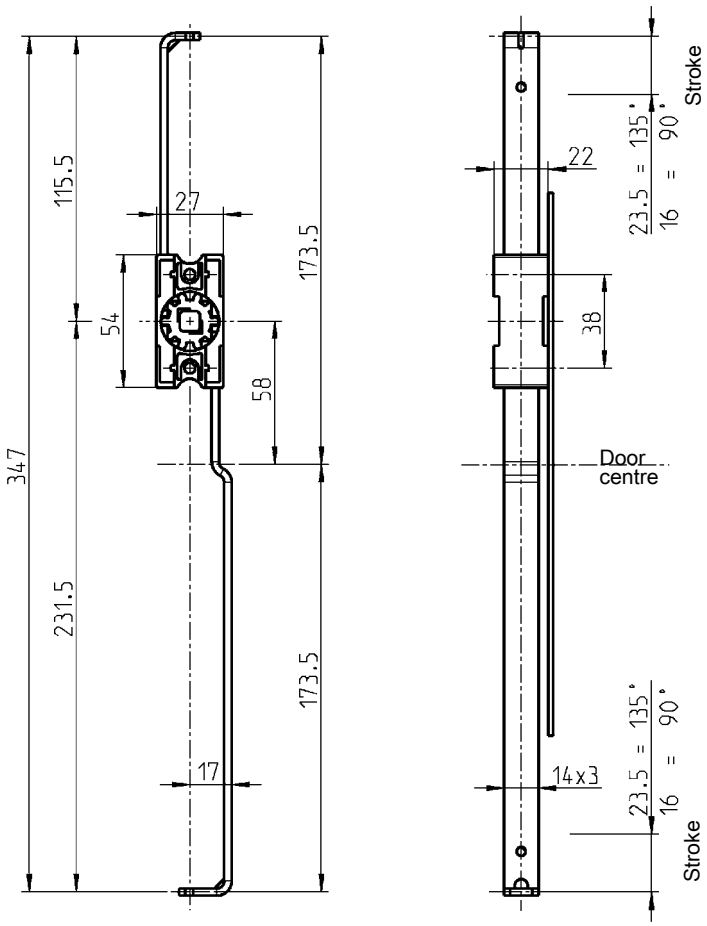

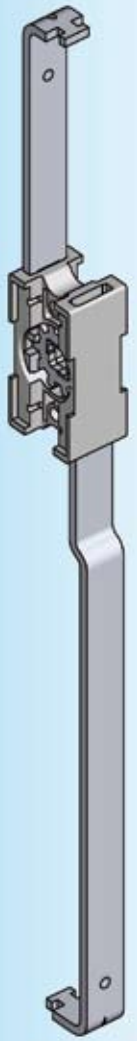

Further parts see page

– Rods	
outside	3ZA-120 3ZA-320
inside	3ZB-120 3ZB-200 3ZB-220
– Cam	3YA-820
Program 2100	
– Escutcheon	3H-120 3H-220
– Swinghandle	3H-320 up to 3H-420

Rod control material on choice	
Zinc die, rod m.s. zinc plated	2121-U26-C
Polyamide black, rods aluminium	2121-U27-C

© EMKA Beschlagteile GmbH & Co. KG • 2016 • www.emka.com

EMKA®

Beschlagteile

Rod control for flat rods

PROGRAM 2100

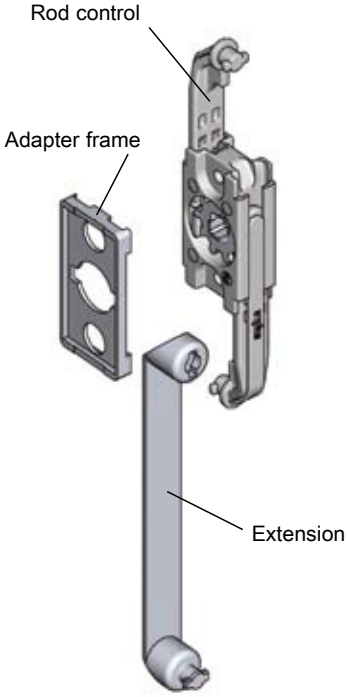

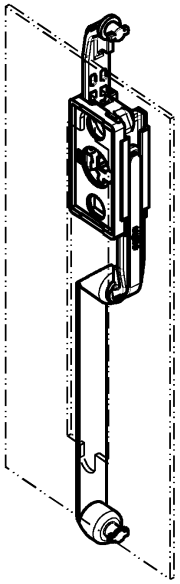

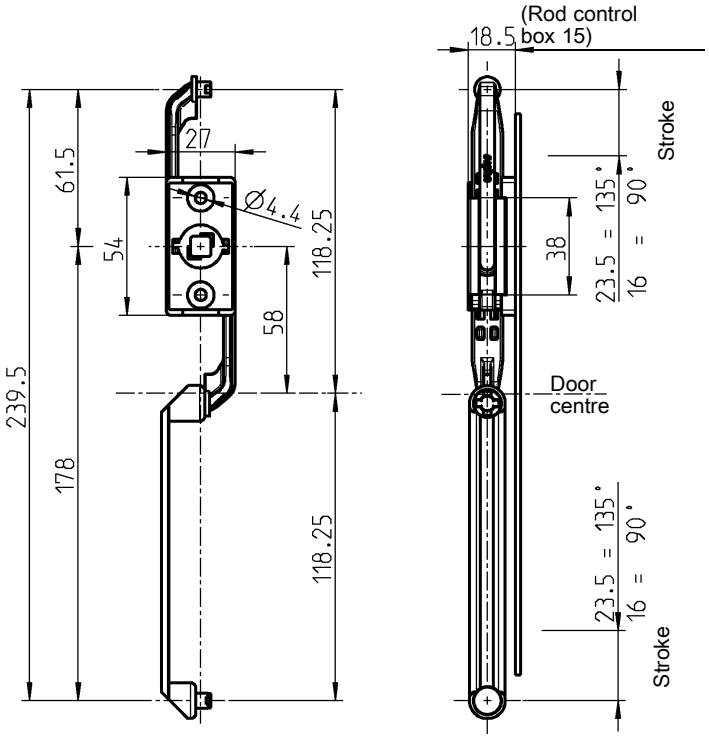

Further parts see page

– Rods

inside	3ZB-120
	3ZB-200
	3ZB-220
– Cam	3YA-820

Program 2100

– Escutcheon	3H-120
	3H-220
– Swinghandle	3H-320
up to	3H-420

Rod control zinc die	
	2200-U1-C
Adapter plate zinc die zinc plated	
	2200-05
Extension zinc die zinc plated	
	2200-06

© EMKA Beschlagteile GmbH & Co. KG • 2016 • www.emka.com

Earthing device for rod control and bearing bush

PROGRAM 1125, 1150, 1225, 1325, 3000

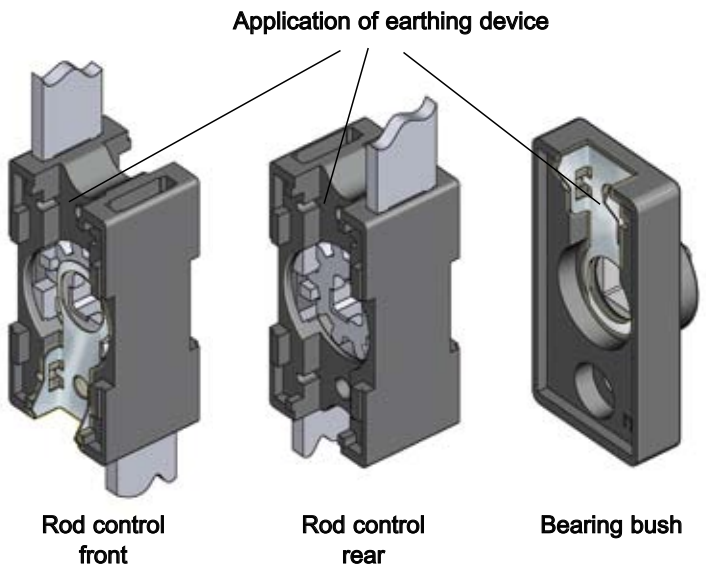

Earthing now possible with plastic locks!

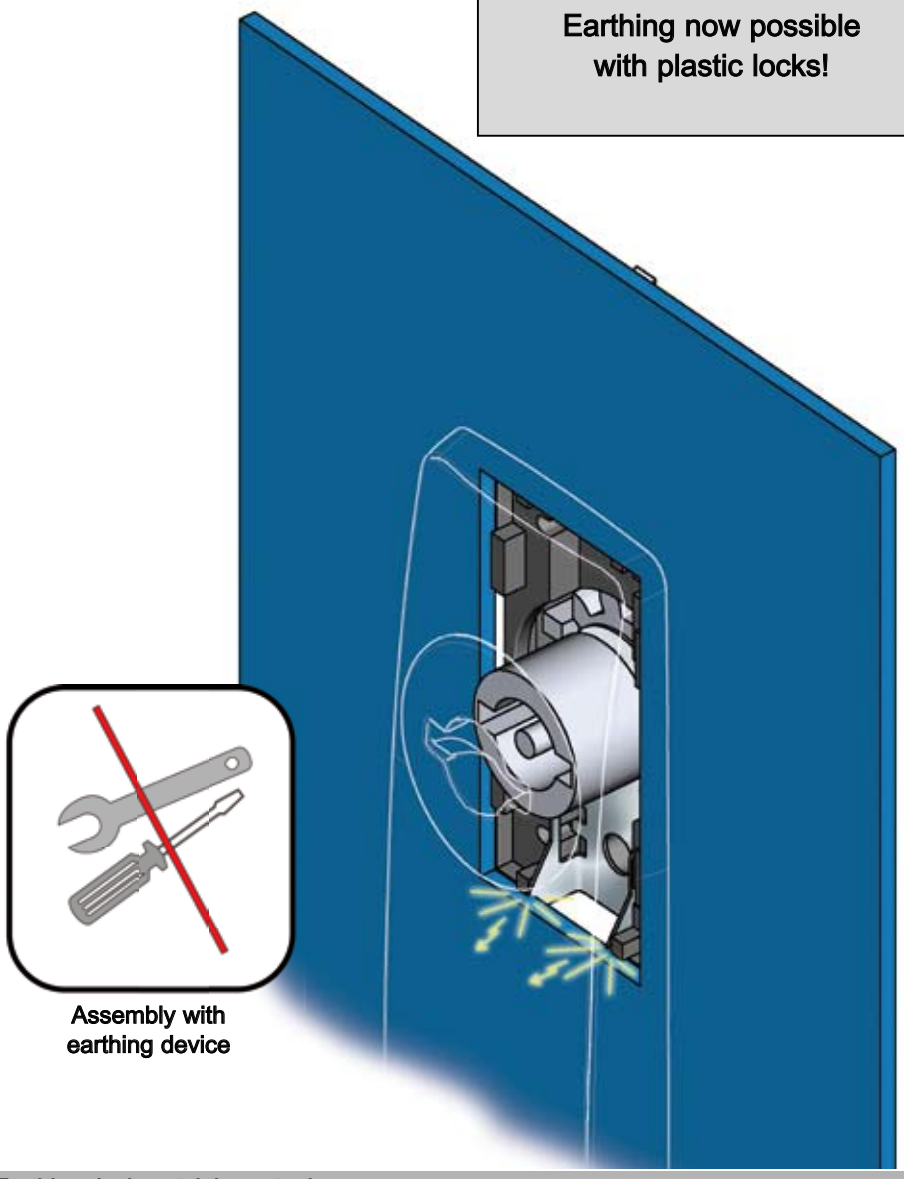

The earthing device passed the test in accordance to DIN EN 60439-1/8.2.4.1! The resistance is max. 0,032 Ohm.

Attention:

The earthing device can be used regardless of the material of the rod control!

The earthing device will not change the assembly!

The earthing device can be assembled to the rod control or bearing bush without a tool.

The mechanical figures are unchanged!

Earthing will be achieved upon assembly of the escutcheon or the swinghandle!

Further parts see page
– Rod control 3YA-110 up to 3YA-240
– Bearing bush 3YB-120 (for Ts 1.0 to 2.0)

Earthing device stainless steel

1121-117

© EMKA Beschlagteile GmbH & Co. KG • 2016 • www.emka.com

EMKA®

Beschlagteile

Cam in zinc die and steel

PROGRAM 1125, 1150, 1225, 1325, 2100, 3000

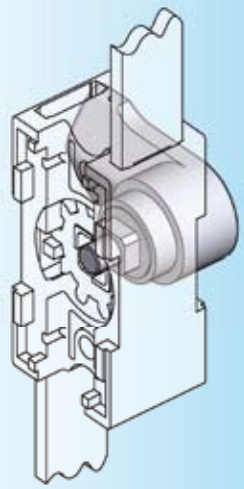

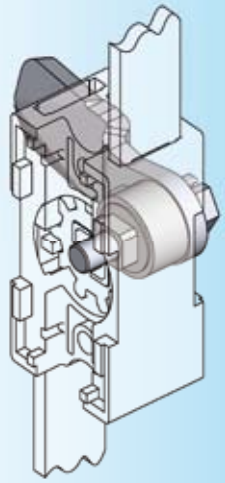

Zinc die cam

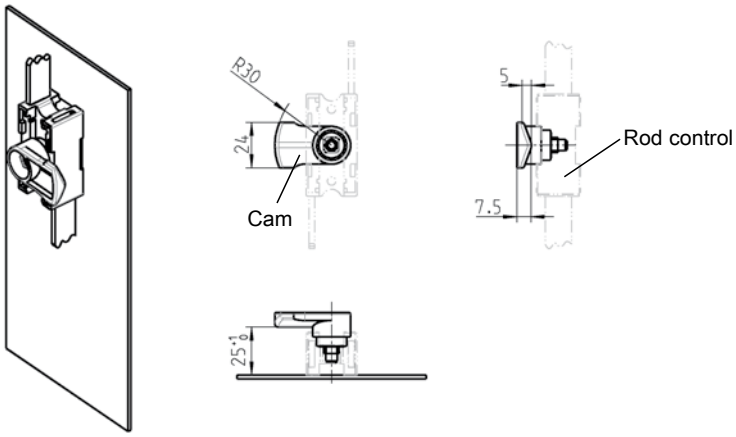

Cam zinc die zinc plated, with screw m.s. zinc plated	
	1121-U25

M.s. cam (only usable with adapter)

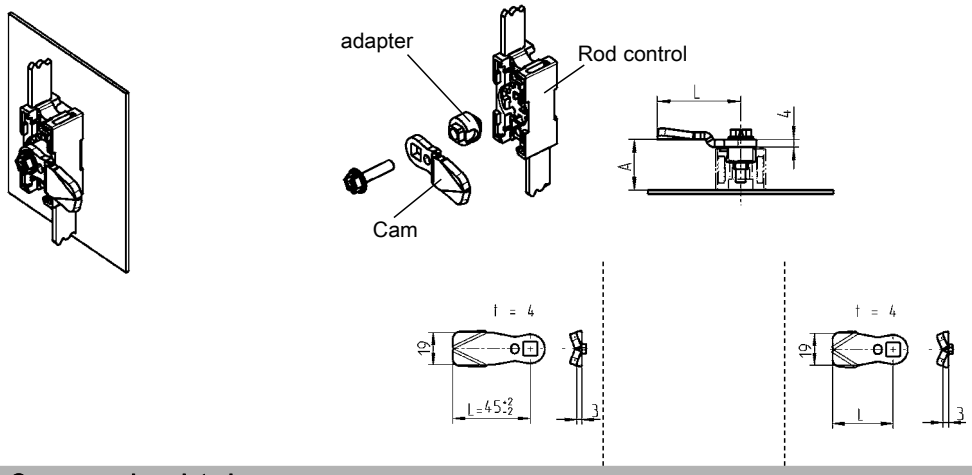

Cam m.s. zinc plated				
A in mm		A	L	
23	1000-17	23	35	1000-5046
25	1000-16	25	35	1000-5161
27	1000-15	27	35	1000-5119
29	1000-14	33	35	1000-5164
30	1000-27	Cam with other A and L dimensions		
31	1000-50			
33	1000-13			
35	1000-28			
37	1000-26			
39	1000-12			
40	1000-11			
41	1000-51			
43	1000-52			
45	1000-25			
47	1000-53			
49	1000-54			
50	1000-10			
52	1000-55			
55	1000-56			

Attention: These A dimensions only apply with a rod control

Adapter zinc die, screw m.s. zinc plated	
	1121-U40

Note:
The ramp increases the compression distance of the lock by 4 mm.

Program 1325:
Works only with escutcheon. Combination with swing handle see page 3YA-840.

Further parts see page
– Ramp 1C-170

– Rod control 3YA-110 up to 3YA-540

© EMKA Beschlagteile GmbH & Co. KG • 2016 • www.emka.com

Cam for rod control

PROGRAM 1325

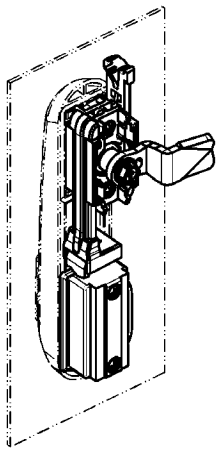

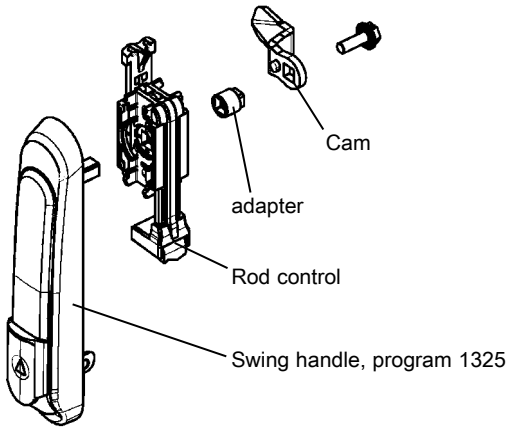

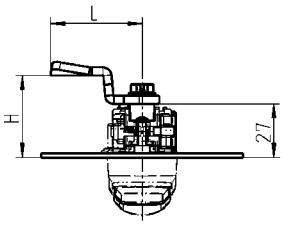

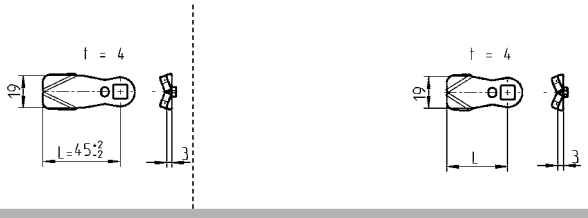

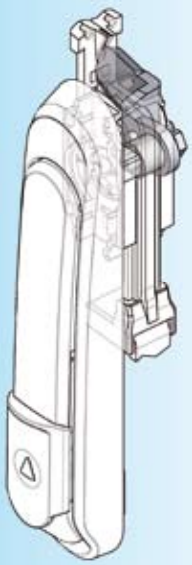

Cam m.s. zinc plated					
H			H	L	
27		1000-17	27	35	1000-5046
29		1000-16	29	35	1000-5161
31		1000-15	31	35	1000-5119
33		1000-14	37	35	1000-5164
34	Attention:	1000-27	Cam with other A and L dimensions		
35	These H dimen-	1000-50			
37	sions	1000-13			
39	only apply with a	1000-28			
41	rod control	1000-26			
43		1000-12			
44		1000-11			
45		1000-51			
47		1000-52			
49		1000-25			
51		1000-53			
53		1000-54			
54		1000-10			
56		1000-55			
59		1000-56			
Adapter AISI 316 L, screw m.s. zinc plated					
					1121-U188

Note:
The ramp increases the compression distance of the lock by 4 mm.

Program 1325:
Works only with swing handle. Combination with escutcheon see page 3YA-820.

Further parts see page

– Ramp	1C-170
– Rod control	3YA-110 3YA-120 3YA-140
Program 1325	
– Swinghandle	3BA-220

© EMKA Beschlagteile GmbH & Co. KG • 2016 • www.emka.com

EMKA®

Beschlagteile

Notes:

Bearing bush with cam
Program 1125, 1225, 1325, 2100, 3000

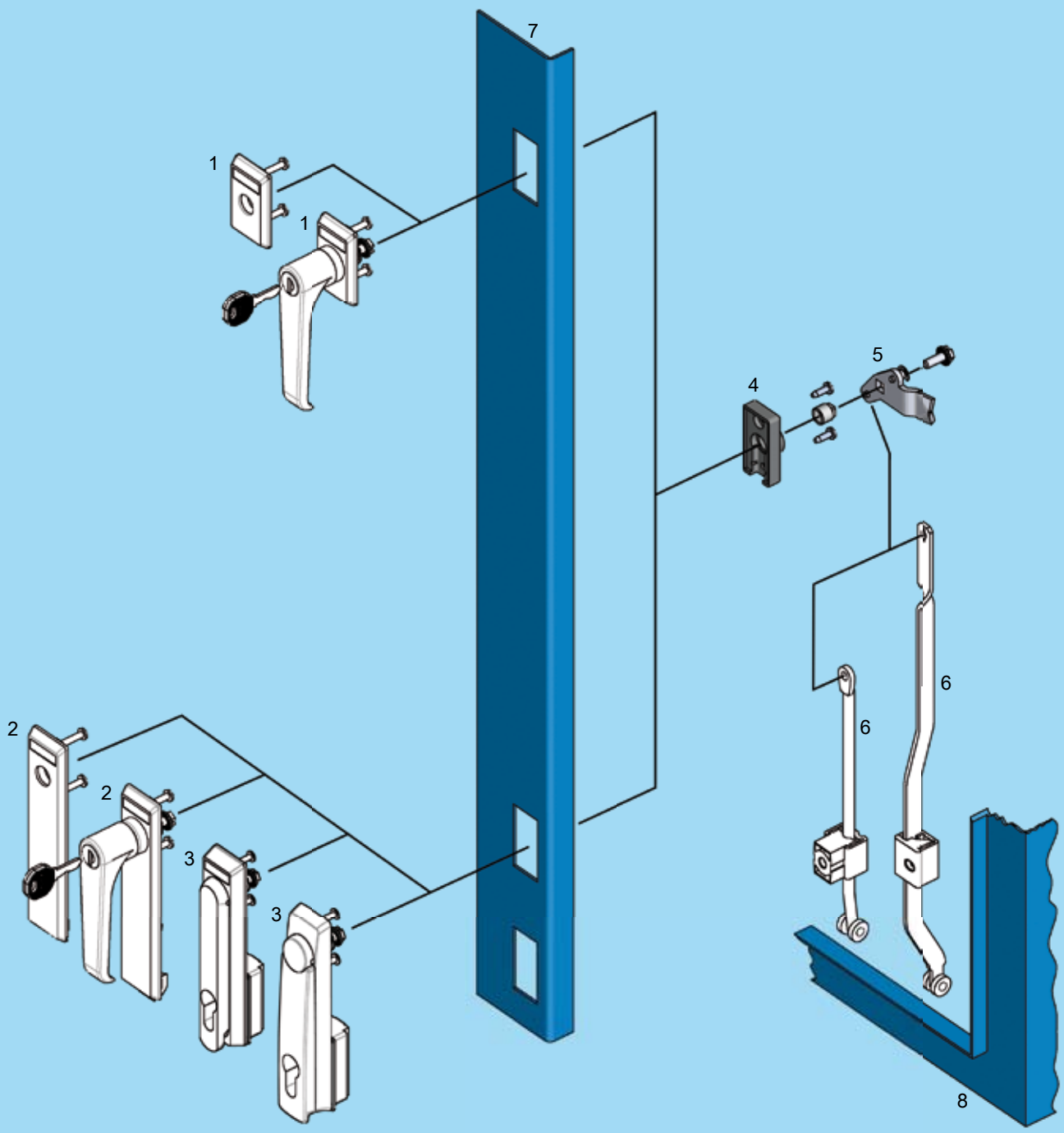

1	Escutcheon short	**Program 1125, 1225**
2	Escutcheon long	**Program 1125, 1225, 1325, 2100**
3	Swinghandle	**Program 1125, 1225, 2100, 3000**
4	Bearing bush	3YB-120, 3YB-140
5	Cam	3YB-420, 3YB-440, 3YB-460
6	Rod (inside the gasketing)	
7	Door	
8	Cabinet/frame	

3YB-100

EMKA®

Beschlagteile

Bearing bush Ts 1,0 – 12,0 mm

PROGRAM 1125, 1225, 1325, 3000

INOX AISI 3..

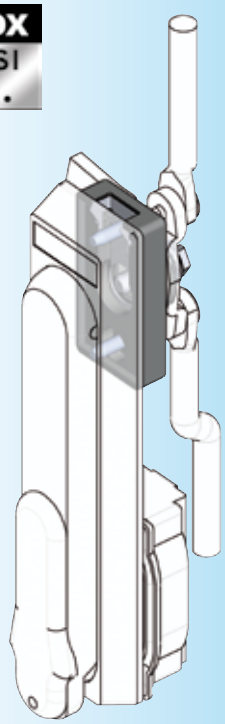

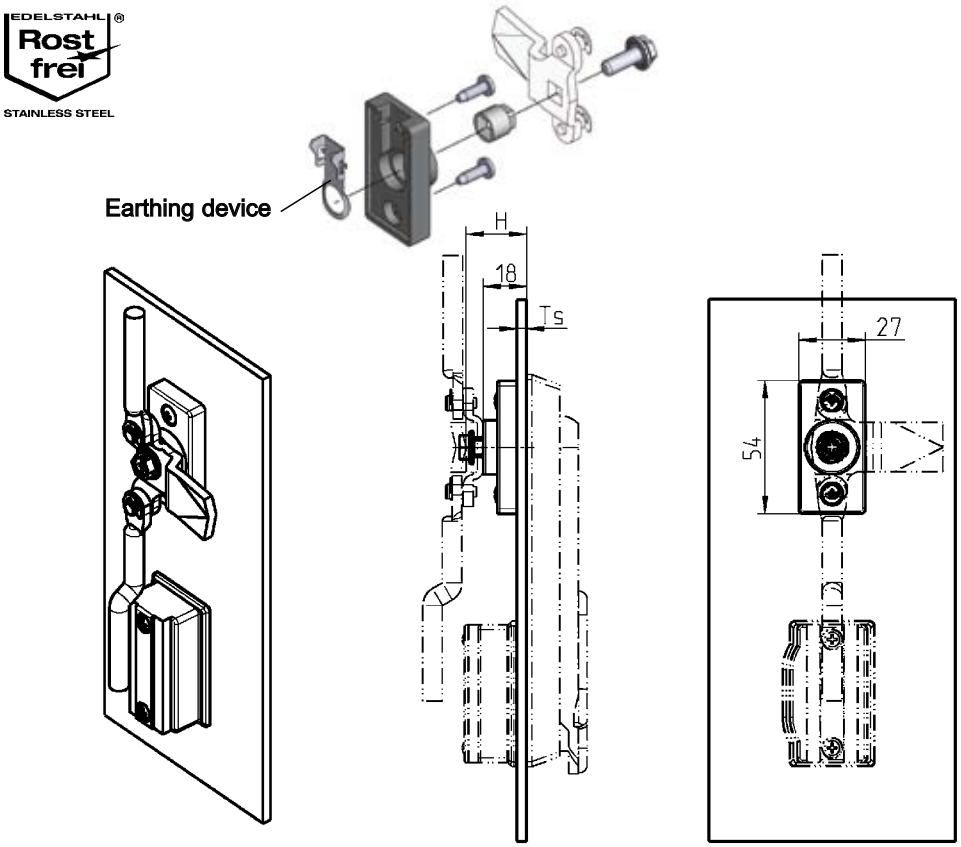

Attention: Escutcheons and swinghandles assembled with rear cap can not be used with standard rods!
Special rods on request!

Note:
Earthing device can be used with bearing bushes for Ts = 1,0, 1,5 and 2,0! (not suited for Program 3000)

Adapter and fixing material for Program 3000 see catalogue page 3N-120

Further parts see page
- Cam for bearing bush without stopper 3YB-420
- Cam for bearing bush with stopper 3YB-440
- Rod control for cam 3YB-460
- Earthing device (not suited for Program 3000) 3YA-720

Program 1125
- Escutcheon 1121 3B-120
- Escutcheon 1123 3B-180
- Swinghandle 3B-220, 3B-420

Program 1225
- Escutcheon 1221 3G-120
- Escutcheon 1223 3G-180
- Swinghandle 3G-220, 3G-420, 3G-520

Program 1325
- Escutcheon 1321 3BA-120

Program 3000
- Swinghandle 3N-120

Bearing bush Polyamide black				
	door	without stop	Escutcheon LH swinghandle RH with stopper	Escutcheon RH Swinghandle LH with stopper
	1,0	1125-81-010	1125-83-010	1125-84-010
	1,5	1125-81-015	1125-83-015	1125-84-015
	2,0	1125-81-020	1125-83-020	1125-84-020
	2,5	1125-81-025	1125-83-025	1125-84-025
	3,0	1125-81-030	1125-83-030	1125-84-030
	4,0	1125-81-040	1125-83-040	1125-84-040
	5,0	1125-81-050	1125-83-050	1125-84-050
	6,0	1125-81-060	1125-83-060	1125-84-060
	8,0	1125-81-080	on request	on request
	10,0	1125-81-100	on request	on request
	11,0	1125-81-110	on request	on request
	12,0	1125-81-120	–	–
Bearing bush zinc die chrome plated				
	2,0	1125-81-020QA	–	–
Bearing bush AISI 316				
	2,0	1125-81-020PH	–	–

Order extra: (not suitable for program 3000, see note)
adapter AISI 316L, fixing material m.s. zinc plated or stainless steel

Program 1125, 1225, 1325		Ts 1,0 – 3,0	Ts 4,0 – 6,0	Ts 8,0 – 12,0
m.s.	Swinghandle	1125-U284	1125-U284	1125-U285
m.s.	Escutcheon	1125-U286	1125-U287	1125-U288
AISI	Swinghandle	1125-U284-PH	–	–
AISI	Escutcheon	1125-U286-PH	–	–

© EMKA Beschlagteile GmbH & Co. KG • 2016 • www.emka.com

Bearing bush Ts 1,0 – 12,0 mm

PROGRAM 2100

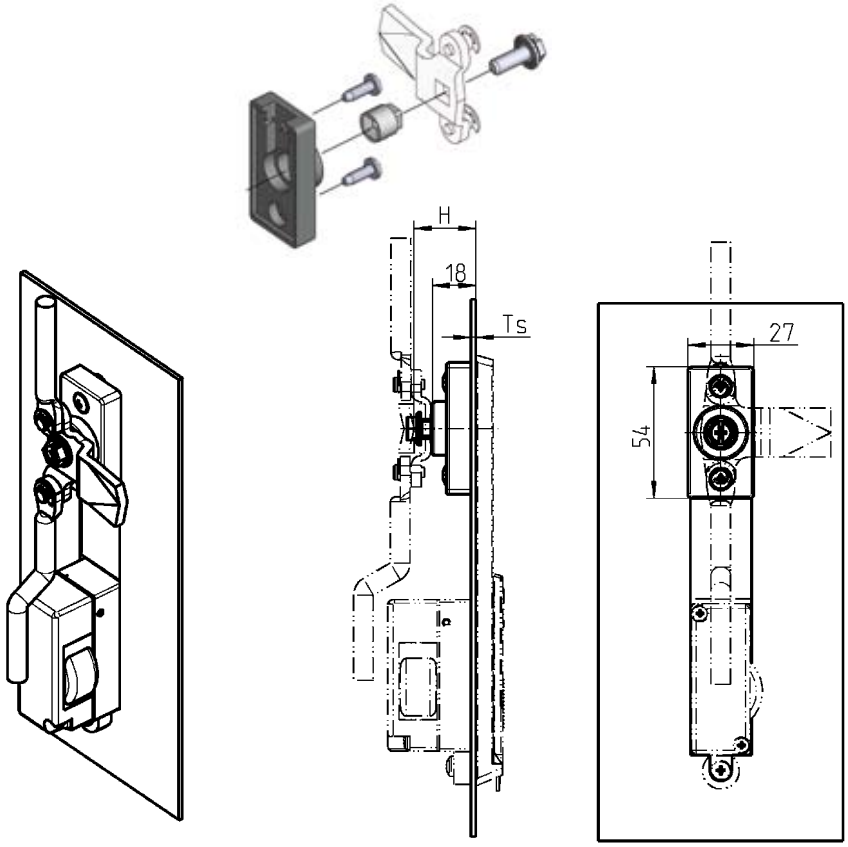

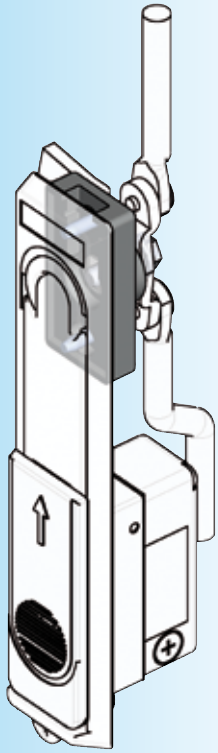

Attention: Swinghandles can not be used with standard rods!
Special rods on request!

Bearing bush Polyamide black			
door gauge	without stop	Escutcheon LH swinghandle RH with stopper	Escutcheon RH Swinghandle LH with stopper
1,0	1125-81-010	1125-83-010	1125-84-010
1,5	1125-81-015	1125-83-015	1125-84-015
2,0	1125-81-020	1125-83-020	1125-84-020
2,5	1125-81-025	1125-83-025	1125-84-025
3,0	1125-81-030	1125-83-030	1125-84-030
4,0	1125-81-040	1125-83-040	1125-84-040
5,0	1125-81-050	1125-83-050	1125-84-050
6,0	1125-81-060	1125-83-060	1125-84-060
8,0	1125-81-080	on request	on request
10,0	1125-81-100	on request	on request
11,0	1125-81-110	on request	on request
12,0	1125-81-120	–	–
Order extra: adapter AISI 316L, fixing material m.s. zinc plated			
for Ts 1,0 - 12,0			1125-U286

Further parts see page
- Cam for bearing bush without stopper 3YB-420
- Cam for bearing bush with stopper 3YB-440
- Rod control for cam 3YB-460

Program 2100
- Escutcheon 2150 3H-120
- Escutcheon 2153 3H-220
- Swinghandle 3H-320 up to 3H-420

© EMKA Beschlagteile GmbH & Co. KG • 2016 • www.emka.com

EMKA®

Beschlagteile

Cams for bearing bush without stopper

PROGRAM 1125, 1225, 1325, 2100, 3000

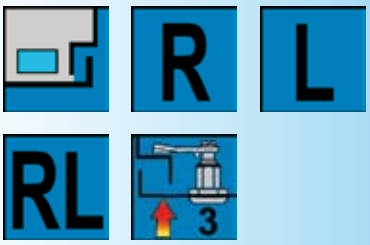

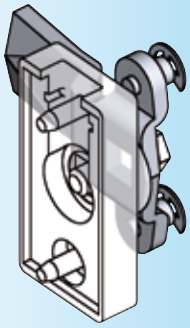

Cam with rivet pins
Stroke 18 mm

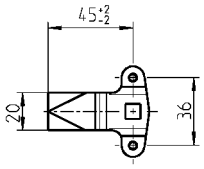

Note:
The ramp increases the compression distance of the lock by 4 mm.

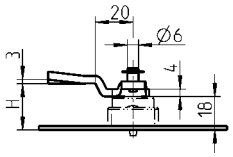

Cam m.s. zinc plated						
H		H		H		
18	1107-U119	30	1107-U124	42	1107-U131	
20	1107-U120	32	1107-U125	44	1107-U132	
22	1107-U5	34	1107-U126	45	1107-U133	
24	1107-U121	35	1107-U127	47	1107-U134	
25	1107-U122	36	1107-U128	50	1107-U135	
26	1107-U123	38	1107-U129			
28	1107-U6	40	1107-U130			
2-point rod control m.s. zinc plated						
						1107-U88

Further parts see page

– Ramp	1C-170
– Rod	
inside	3ZB-120
– Bearing bush	3YB-120 3YB-140

cam with rivet pins
Stroke 26 mm

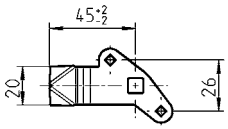

Version A: Cam with T rivets

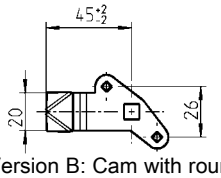

Version B: Cam with round rivets

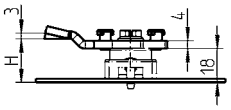

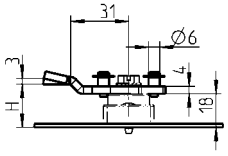

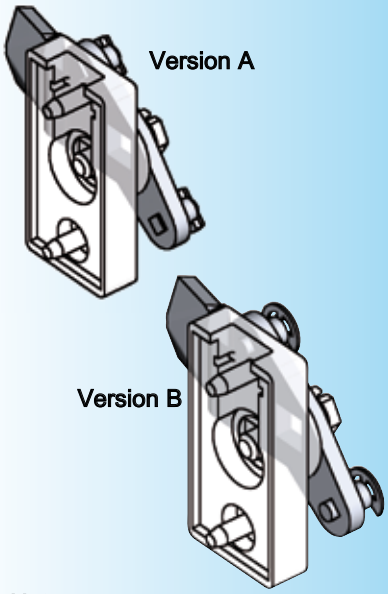

Note:
The ramp increases the compression distance of the lock by 4 mm.

Version A: Cam m.s. zinc plated					
H	RH	LH	H	RH	LH
23	1000-U544-23	1000-U545-23	31	1000-U544-31	1000-U545-31
25	1000-U544-25	1000-U545-25	35	1000-U544-35	1000-U545-35
27	1000-U544-27	1000-U545-27	38	1000-U544-38	1000-U545-38
29	1000-U544-29	1000-U545-29			
2-point rod control m.s. zinc plated					
					1000-U632

Further parts see page

– Ramp	1C-170

Program 1125, 1225, 1325, 3000

– Rod	
inside	3ZB-420
– Bearing bush	3YB-120

Program 2100

– Rod	
inside	3ZB-820
– Bearing bush	3YB-140

Version B: Cam m.s. zinc plated					
H	RH	LH	H	RH	LH
23	1000-U661-23	1000-U662-23	31	1000-U661-31	1000-U662-31
25	1000-U661-25	1000-U662-25	35	1000-U661-35	1000-U662-35
27	1000-U661-27	1000-U662-27	38	1000-U661-38	1000-U662-38
29	1000-U661-29	1000-U662-29	40	1000-U661-40	1000-U662-40
2-point rod control m.s. zinc plated					
					1000-U663

© EMKA Beschlagteile GmbH & Co. KG • 2016 • www.emka.com

Cams for bearing bush with stopper

PROGRAM 1125, 1225, 1325, 2100, 3000

Cam with rivet pins
Stroke 18 mm

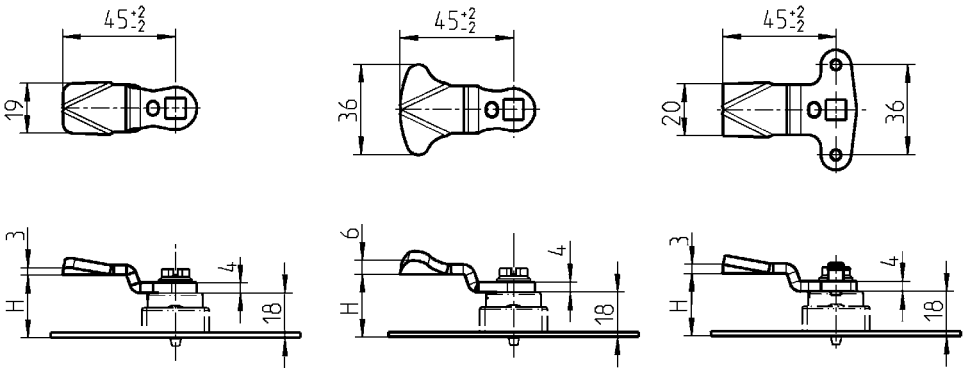

Cam m.s. zinc pl.		Cam m.s. zinc pl.		Cam m.s. zinc pl.	
H		H		H	
18	1000-17	18	1000-293	18	1000-U26
20	1000-16	20	1000-294	20	1000-U27
22	1000-15	22	1000-295	22	1000-U28
24	1000-14	24	1000-296	24	1000-U29
25	1000-27	25	1000-297	25	1000-U30
26	1000-50	26	1000-298	26	1000-U31
28	1000-13	28	1000-299	28	1000-U32
30	1000-28	30	1000-300	30	1000-U33
32	1000-26	32	1000-301	32	1000-U34
34	1000-12	34	1000-302	34	1000-U35
35	1000-11	35	1000-303	35	1000-U36
36	1000-51	36	1000-304	36	1000-U37
38	1000-52	38	1000-305	38	1000-U38
40	1000-25	40	1000-306	40	1000-U39
42	1000-53	42	1000-307	42	1000-U40
44	1000-54	44	1000-308	44	1000-U41
45	1000-10	45	1000-309	45	1000-U42
47	1000-55	47	1000-310	47	1000-U43
50	1000-56	50	1000-311	50	1000-U44

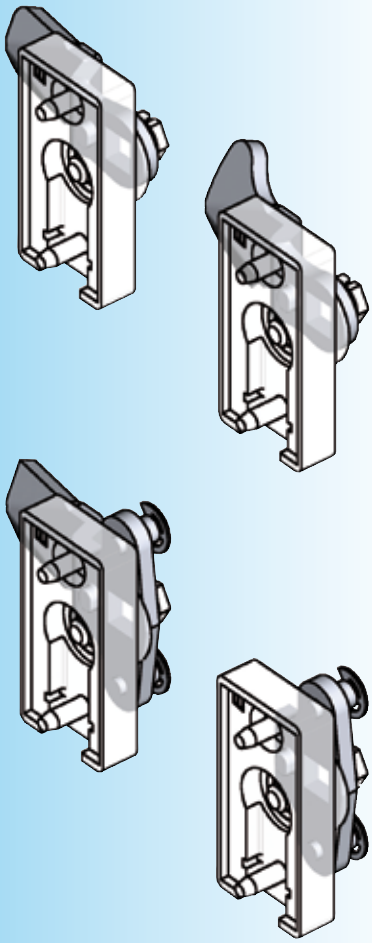

Note:
The ramp increases the compression distance of the lock by 4 mm.

Cam with rivet pins
Stroke 18 mm

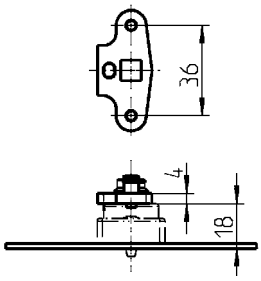

2-point rod control m.s. zinc plated	
	1000-U167

Further parts see page

– Ramp	1C-170
– Rod	
inside	3ZB-120
– Bearing bush	3YB-120 3YB-140

© EMKA Beschlagteile GmbH & Co. KG • 2016 • www.emka.com

EMKA®

Beschlagteile

Rod control for cam

PROGRAM 1125, 1225, 1325, 2100, 3000

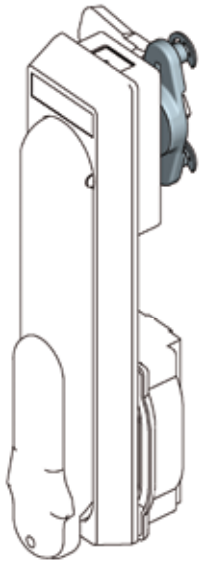

Stroke 18 mm

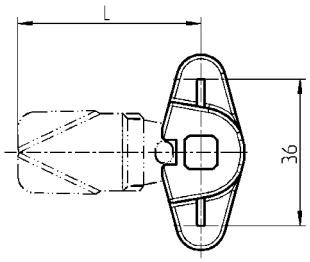

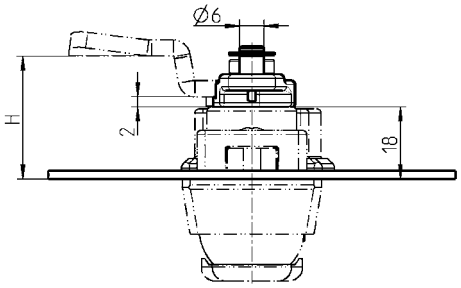

Attention:
By using the rod control the H-dimension of the cam increases by 2 mm

Note:
The ramp increases the compression distance of the lock by 4 mm.

Further parts see page

– Cam (GH=18)	1C-120
– Ramp	1C-170
– Rod	
inside	3ZB-120
– Bearing bush	3YB-120 3YB-140

Rod control zinc die, zinc plated, circlip m.s. zinc plated	
	1107-U246
Rod control AISI 316	
	1107-U246-PH

© EMKA Beschlagteile GmbH & Co. KG • 2016 • www.emka.com

Cam
Program 1091, 1107, 1125

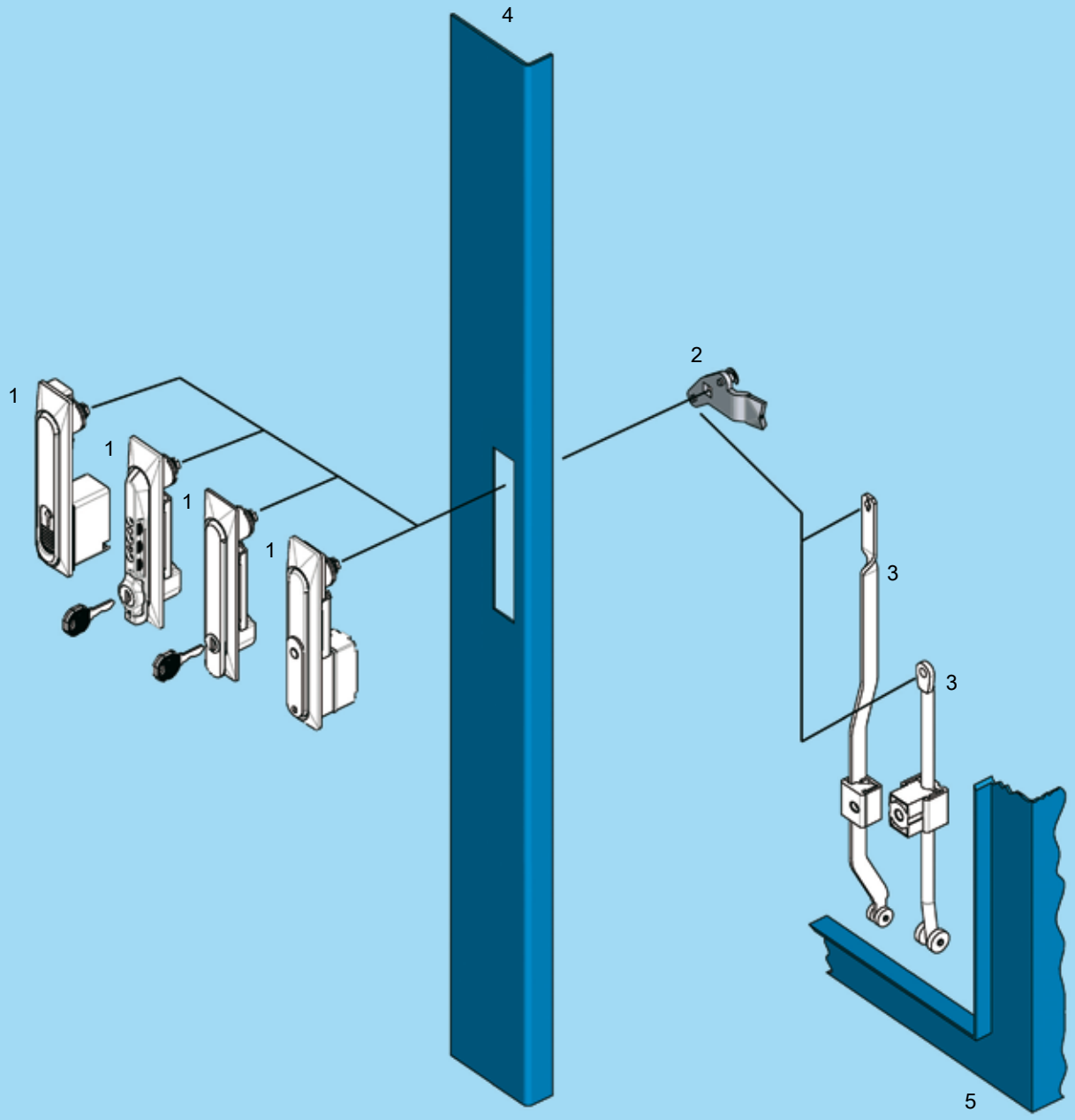

1 Swinghandle
2 Cam
3 Rod (inside the gasketing)
4 Door
5 Cabinet/frame

Program 1107, 1125, 1150, 1180, 1225, 1317, 1325
3YC-120, 3YC-140, 3YC-180

EMKA®

Beschlagteile

Cam

PROGRAM 1107, 1125, 1150, 1180, 1317, 1325

Cam with rivet pins
Stroke 18 mm

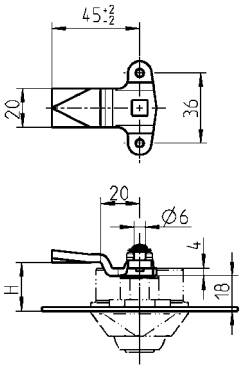

Attention:
Not suitable for program 1150!

Cam m.s. zinc plated							
H		H		H		H	
4	1107-U112	18	1107-U119	30	1107-U124	42	1107-U131
6	1107-U113	20	1107-U120	32	1107-U125	44	1107-U132
8	1107-U114	22	1107-U5	34	1107-U126	45	1107-U133
10	1107-U115	24	1107-U121	35	1107-U127	47	1107-U134
13	1107-U116	25	1107-U122	36	1107-U128	50	1107-U135
14	1107-U117	26	1107-U123	38	1107-U129		
16	1107-U118	28	1107-U6	40	1107-U130		
2-point rod control, m.s. zinc pl.							
							1107-U88

Further parts see page
– Ramp 1C-170

Program 1107, 1317
– Rod
inside from 3ZB-120
– Swing handle 1107 3A-120 to 3A-420
– Swing handle 1317 3AB-120 to 3AB-160

Program 1125
– Rod on request
– Swinghandle (Version B) 3B-320

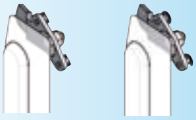

Cam with rivet pins
Stroke 26 mm

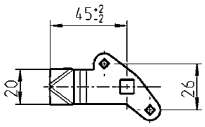

Version A: Cam with T rivets

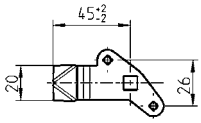

Version B: Cam with round rivets

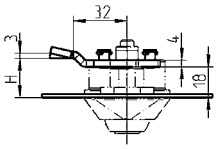

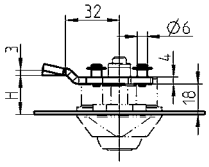

Further parts see page
– Ramp 1C-170

Program 1107, 1317
– Rod
inside 3ZB-320
– Swing handle 1107 3A-120 up to 3A-420
– Swing handle 1317 3AB-120 up to 3AB-160

Program 1125
– Rod
inside 3ZB-440
– Swinghandle (Version B) 3B-320

Program 1150
– Rod
inside for swinghandle (3C-140, 3C-620 to 3C-750) 3ZB-520
inside for swinghandle (3C-160, 3C-220, 3C-260 to 3C-320) 3ZB-540
– Swinghandle 3C-140 up to 3C-320
3C-620 up to 3C-750

Program 1180
– Rod
inside 3ZB-620
– Swinghandle 1185 3E-520
3E-540

Program 1325
– Rod
inside 3ZB-420
– Swinghandle 3BA-220

Version A: Cam m.s. zinc plated					
H	RH	LH	H	RH	LH
23	1000-U544-23	1000-U545-23	31	1000-U544-31	1000-U545-31
25	1000-U544-25	1000-U545-25	35	1000-U544-35	1000-U545-35
27	1000-U544-27	1000-U545-27	38	1000-U544-38	1000-U545-38
29	1000-U544-29	1000-U545-29			
2-point rod control, m.s. zinc pl.					
					1000-U632
Version B: Cam m.s. zinc plated					
H	RH	LH	H	RH	LH
23	1000-U661-23	1000-U662-23	31	1000-U661-31	1000-U662-31
25	1000-U661-25	1000-U662-25	35	1000-U661-35	1000-U662-35
27	1000-U661-27	1000-U662-27	38	1000-U661-38	1000-U662-38
29	1000-U661-29	1000-U662-29	40	1000-U661-40	1000-U662-40
Rod control m.s. zinc plated					
					1000-U663

© EMKA Beschlagteile GmbH & Co. KG • 2016 • www.emka.com

Cam

PROGRAM 1125, 1150, 1180, 1225

Cam with rivet pins
Stroke 26 mm
Program 1150, 1180

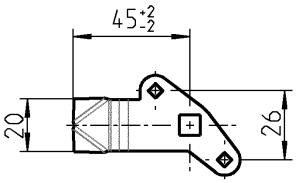

Version A: Cam with T rivets

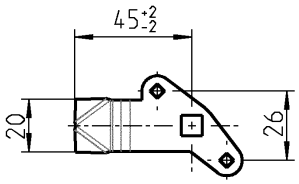

Version B: Cam with round rivets

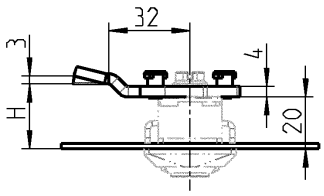

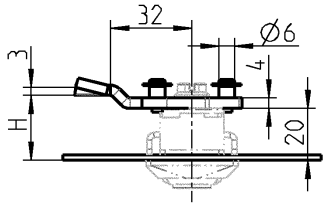

Version A: Cam m.s. zinc plated					
H	RH	LH	H	RH	LH
25	1000-U544-23	1000-U545-23	33	1000-U544-31	1000-U545-31
27	1000-U544-25	1000-U545-25	37	1000-U544-35	1000-U545-35
29	1000-U544-27	1000-U545-27	40	1000-U544-38	1000-U545-38
31	1000-U544-29	1000-U545-29			
2-point rod control, m.s. zinc pl.					
					1000-U632
Version B: Cam m.s. zinc plated					
H	RH	LH	H	RH	LH
25	1000-U661-23	1000-U662-23	33	1000-U661-31	1000-U662-31
27	1000-U661-25	1000-U662-25	37	1000-U661-35	1000-U662-35
29	1000-U661-27	1000-U662-27	40	1000-U661-38	1000-U662-38
31	1000-U661-29	1000-U662-29	42	1000-U661-40	1000-U662-40
Rod control m.s. zinc plated					
					1000-U663

Cam with rivet pins
Stroke 26 mm
Program 1125, 1225

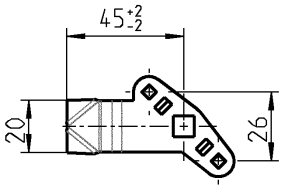

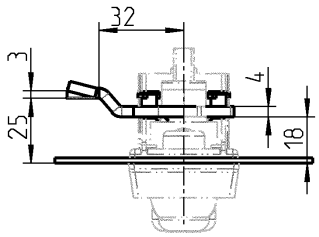

Version B: Cam m.s. zinc plated		
H	RH	LH
25	1107-U242-25	1107-U243-25

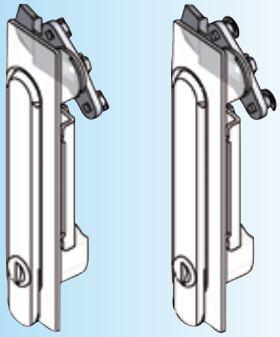

Further parts see page
– Ramp 1C-170

Program 1150
– Rod
inside for swinghandle 1150 (3C-120) 3ZB-520
inside for swinghandle 1151 (3C-420) 3ZB-540
– Swinghandle 1150 3C-120
– Swinghandle 1151 3C-420

Program 1180
– Rod
inside 3ZB-620
– Swinghandle 1180 3E-320

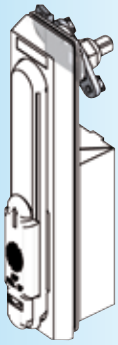

Further parts see page
– Ramp 1C-170

Program 1125
– Rod
inside 3ZB-440
– Swinghandle (Version C) 3B-320

Program 1225
– Rod
inside 3ZB-720
– Swinghandle 3G-320

© EMKA Beschlagteile GmbH & Co. KG • 2016 • www.emka.com

EMKA®

Beschlagteile

Rod control for cam

PROGRAM 1091, 1107, 1125, 1150, 1317, 1325

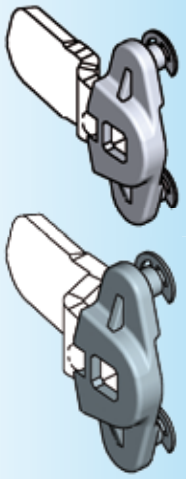

Attention:
By using the rod control the H-dimension of the cam increases by 2 mm

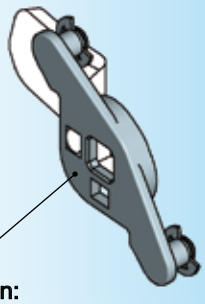

Attention:
Use only rod with eye!

Further parts see page
- Cam (GH=18) 1C-120
- Ramp 1C-170
- Connecting rod inside (see note) 3ZB-120

Program 1091
- Heavy duty latch 10A-640

Program 1107, 1317
- Swinghandle 1107 3A-120 up to 3A-220
- Swinghandle 1317 3AB-120 up to 3AB-160

Program 1125, 1325
- Swing handle 1125 (version B) 3B-320
- Swinghandle 1325 3BA-220

Program 1150
- Swinghandle 1154 3C-220
- Swinghandle 1154 with WK2 3C-260

EDELSTAHL Rost frei STAINLESS STEEL

Stroke 18 mm

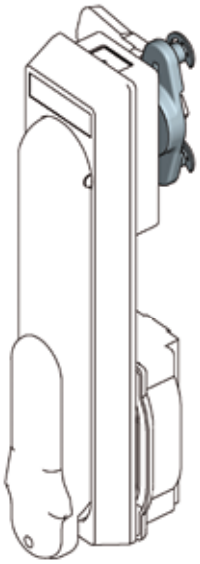

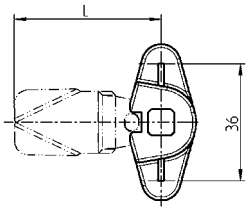

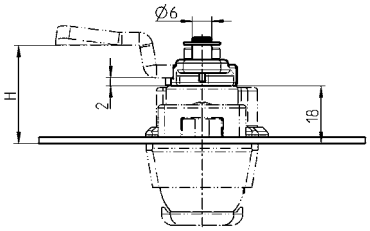

Note:
Rod for rod control combined with swinghandle 1125 double cylinder Version B and swinghandle 1154 with WK 2 on request only!

Rod control zinc die, zinc plated, circlip m.s. zinc plated	
	1107-U246
Rod control AISI 316	
	1107-U246-PH

EDELSTAHL Rost frei STAINLESS STEEL

Stroke 35 mm

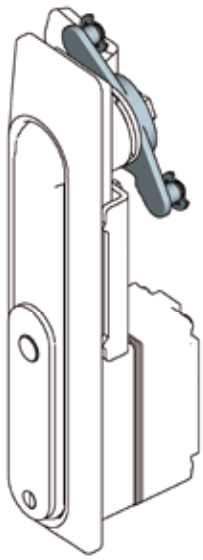

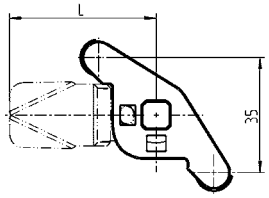

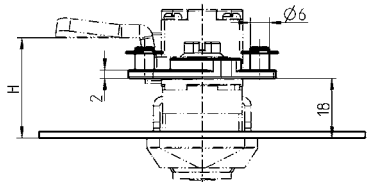

Note:
Rod for rod control combined with swinghandle 1125 double cylinder Version B and swinghandle 1154 with WK 2 on request only!

Rod control AISI 316	
	1150-U57

© EMKA Beschlagteile GmbH & Co. KG • 2016 • www.emka.com

Rod control for cam

PROGRAM 1325, 1150

Only cams with stopper of steel and stainless steel can be used

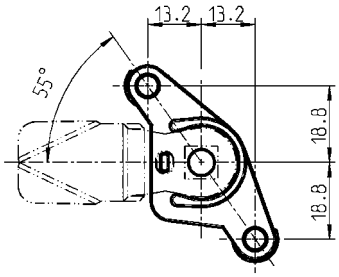

Stroke 32 mm

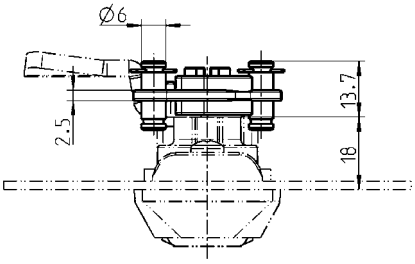

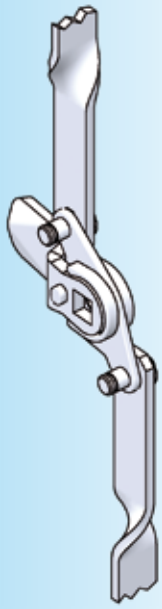

Swinghandle 1325 with adapter for cam

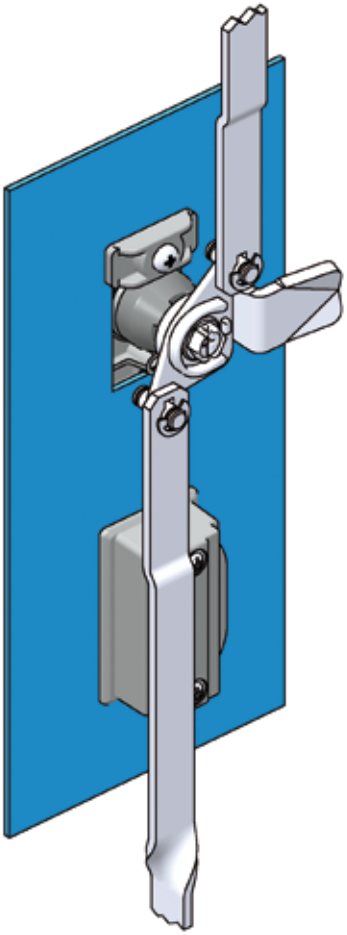

Swinghandle 1150 with universal escutcheon

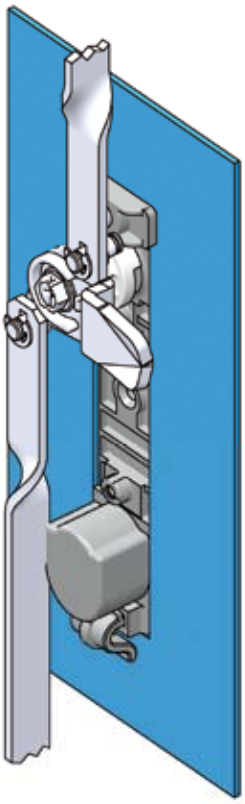

Attention:
Only cams with stopper of steel and stainless steel can be used.

Note:
When using the rod control for cam, the engagement depth of the
screw is reduced by 2.5 mm

Further parts see page
– Cam (GH=18) 1C-120
– Ramp 1C-170
– Connecting rod for 1150
inside 3ZB-520
Attention: The rod length is reduced by 5.8 mm, as the stroke is 32 mm

– Connecting rod for 1325
inside 3ZB-420
Attention: The rod length is reduced by 5.8 mm, as the stroke is 32 mm

Program 1150
with universal escutcheon
– Swinghandle 1150 3C-720
up to 3A-780

Program 1325
with adapter for cam
– Swing handle 1325 3BA-220

Rod control zinc die zinc plated; circlip m.s. zinc plated; with additional vibration proof screw m.s. zinc plated	
for swinghandle 1150 with universal dish	1150-U63-01
for swinghandle 1325 with adapter for cam	1150-U63-02

© EMKA Beschlagteile GmbH & Co. KG • 2016 • www.emka.com

EMKA®

Beschlagteile

Notes:

Rod and lock rod outside the gasketing Program 1125, 1150, 1160, 1180, 1190, 1225, 1325, 1390, 2100, 2400, 3000

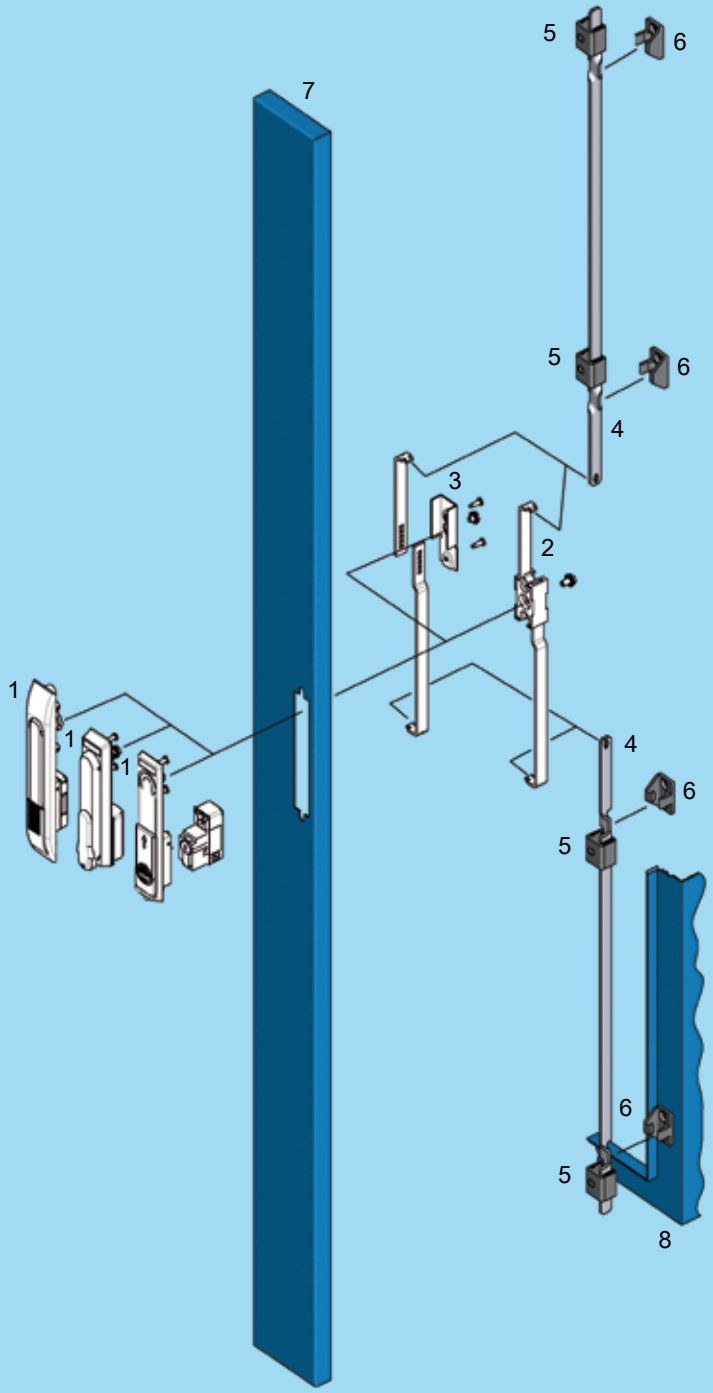

1 Swinghandle and escutcheon program 1125, 1150, 1160, 1180, 1190, 1225, 1325, 1390, 2100, 2400, 3000
2 Rod control
3 Rod control
4 Rod for rod control / rod gear (outside the gasketing)
5 Rod guide
6 Catches
7 Door
8 Housing/frame

Rods

PROGRAM 1125, 1150, 1160, 1180, 1190, 1225, 1325, 2100, 3000

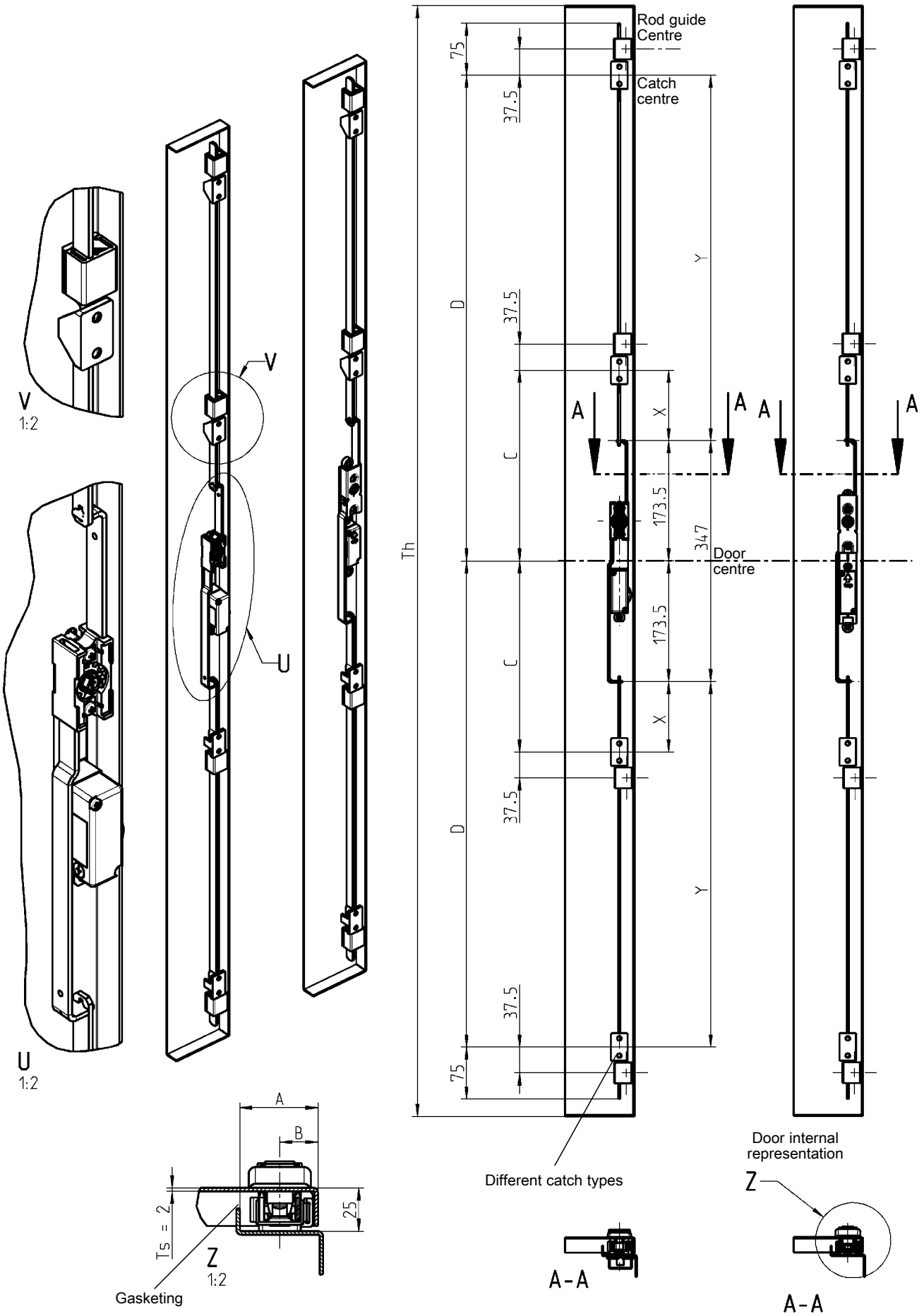

4 different locking systems

A

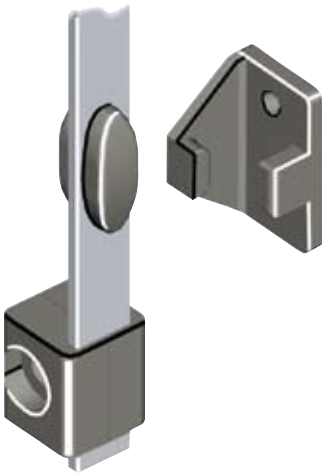

Rod with locking slider
see catalogue page 3ZA-220

B

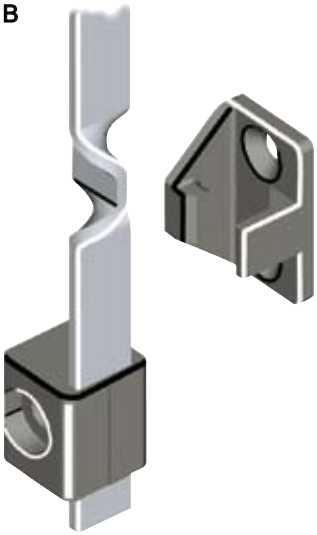

Twisted rod
see catalogue page 3ZA-220

C

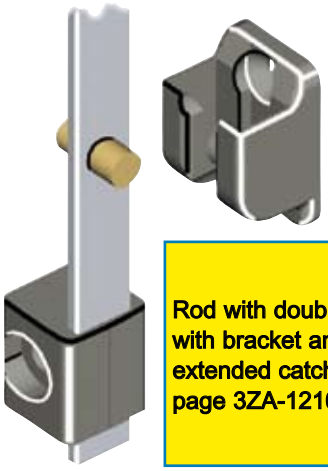

Rod with double roll for catch with bracket and extended catch area see page 3ZA-1210

Rod with double rollers
see catalogue page 3ZA-260

D

Rod with cut-out
see catalogue page 3ZA-260

Attention:
Suitable for use with the 90° turn - see catalogue page 3ZA-1120

PROGRAM	Dimension A	Dimension B
1125	45	23
1150	45	22
1160	45	22
1180	45	22
1190	42	20
1225	45	23
1325	45	23
2100	45	22

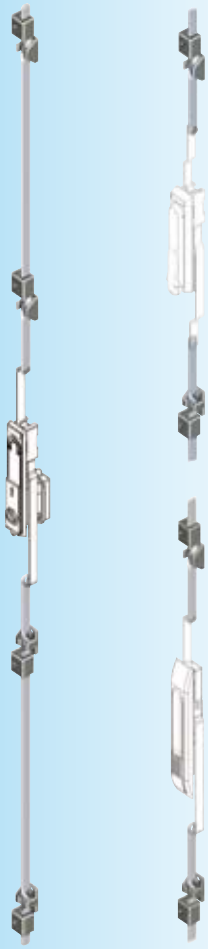

Further parts see page

– Rods with turn 3ZA-1120

Program 1160
– Swinghandle and escutcheon 3D-120, 3D-140

Program 1180
– Swinghandle and escutcheon 3E-120, 3E-140
– Rod control 3YA-480

Program 1190
– Swinghandle 3F-120
– Escutcheon 3F-220

Program 1125, 1150, 1225, 1325, 3000
– Rod control 3YA-110, 3YA-120

Program 1150
– Rod control 3YA-420, 3YA-440

Program 2100
– Rod control 3YA-520

© EMKA Beschlagteile GmbH & Co. KG • 2016 • www.emka.com

EMKA®

Beschlagteile

Overview of rods

PROGRAM 1125 - 3000

RL

INOX AISI 3..

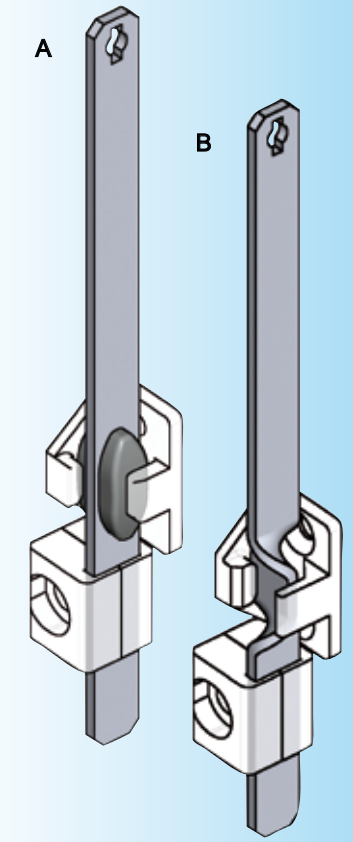

Note:
For dimensions see table on catalogue page 3ZA-120

EDELSTAHL Rost frei STAINLESS STEEL

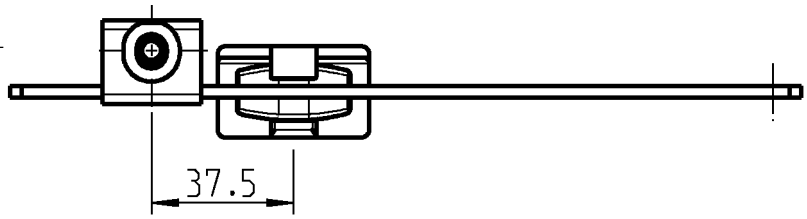

A

Door height	Rods		Locking points (door centre)		Rod material as requested; locking slider polyamide GF black	
Th	Dim. X	Dim. Y	Dim. C	Dim. D	Material	Part no.
800-1200	–	126,5	–	300	m.s. zinc pl. alum. AISI 304	1121-U99 1121-U100 1121-U101
1200-1600	–	276,5	–	450	m.s. zinc pl. alum. AISI 304	1121-U105 1121-U106 1121-U107
1600-1900	101,5	526,5	275	700	m.s. zinc pl. alum. AISI 304	1121-U111 1121-U112 1121-U113
1900-2200	101,5	676,5	275	850	m.s. zinc pl. alum. AISI 304	1121-U117 1121-U118 1121-U119

EDELSTAHL Rost frei STAINLESS STEEL

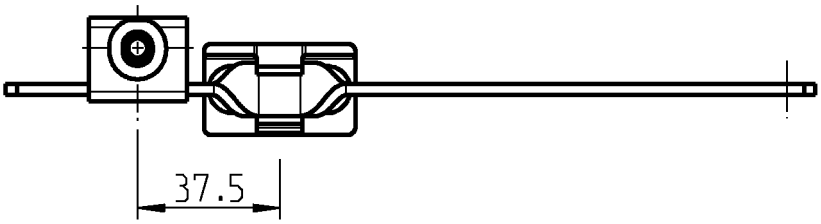

B

Door height	Rods		Locking points (door centre)		Rod material as requested	
Th	Dim. X	Dim. Y	Dim. C	Dim. D	Material	Part no.
800-1200	–	126,5	–	300	m.s. zinc pl. alum. AISI 304	1121-71-01RA 1121-71-01TA 1121-71-01PC
1200-1600	–	276,5	–	450	m.s. zinc pl. alum. AISI 304	1121-71-03RA 1121-71-03TA 1121-71-03PC
1600-1900	101,5	526,5	275	700	m.s. zinc pl. alum. AISI 304	1121-71-05RA 1121-71-05TA 1121-71-05PC
1900-2200	101,5	676,5	275	850	m.s. zinc pl. alum. AISI 304	1121-71-07RA 1121-71-07TA 1121-71-07PC

Further parts see page
- Catches 3ZA-1220
- Rod guide 3ZC-120 to 3ZC-170

Program 1160
- Swinghandle and escutcheon 3D-120, 3D-140

Program 1180
- Swinghandle and escutcheon 3E-120, 3E-140
- Rod control 3YA-480

Program 1190
- Swinghandle 3F-120
- Escutcheon 3F-220

Program 1125, 1150, 1225, 1325, 3000
- Rod control 3YA-110, 3YA-120

Program 1150
- Rod control 3YA-420, 3YA-440

Program 2100
- Rod control 3YA-520

© EMKA Beschlagteile GmbH & Co. KG • 2016 • www.emka.com

Overview of rods

PROGRAM 1125 - 3000

EDELSTAHL Rost frei STAINLESS STEEL

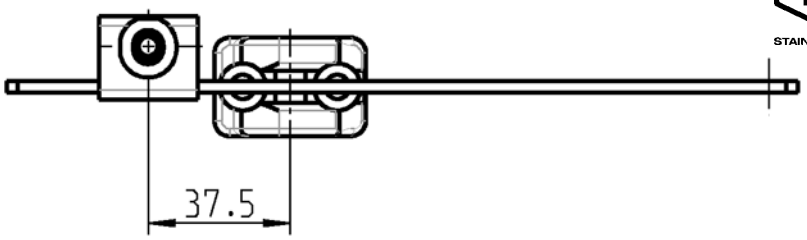

C

Door height Th	Rods Dim. X	Rods Dim. Y	Locking points (door centre) Dim. C	Locking points (door centre) Dim. D	Rod material as requested; double roller brass Material	Part no.
800-1200	–	126,5	–	300	m.s. zinc pl.	1121-U155
					alum.	on request
					AISI 304	on request
1200-1600	–	276,5	–	450	m.s. zinc pl.	1121-U158
					alum.	on request
					AISI 304	on request
1600-1900	101,5	526,5	275	700	m.s. zinc pl.	1121-U161
					alum.	on request
					AISI 304	on request
1900-2200	101,5	676,5	275	850	m.s. zinc pl.	1121-U164
					alum.	on request
					AISI 304	on request

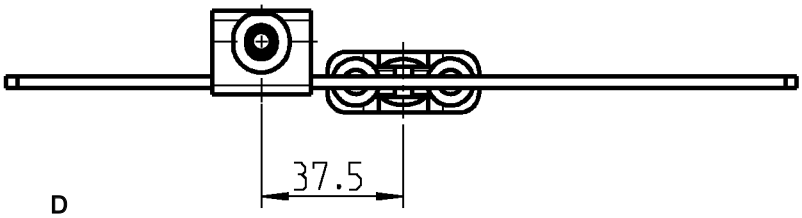

D

Door height Th	Rods Dim. X	Rods Dim. Y	Locking points (door centre) Dim. C	Locking points (door centre) Dim. D	Rod material as requested Material	Part no.
800-1200	–	126,5	–	300	m.s. zinc pl.	1121-68-01RA
					alum.	–
					AISI 304	–
1200-1600	–	276,5	–	450	m.s. zinc pl.	1121-68-03RA
					alum.	–
					AISI 304	–
1600-1900	101,5	526,5	275	700	m.s. zinc pl.	1121-68-05RA
					alum.	–
					AISI 304	–
1900-2200	101,5	676,5	275	850	m.s. zinc pl.	1121-68-07RA
					alum.	–
					AISI 304	–

RL INOX AISI 3..

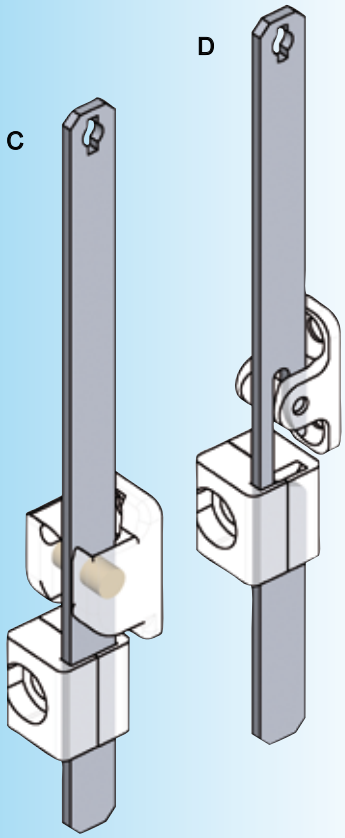

Note:
For dimensions see table on catalogue page 3ZA-120

Further parts see page
– Catches 3ZA-1220, 3ZA-1240
– Rod guide 3ZC-120 to 3ZC-170

Program 1160
– Swinghandle and escutcheon 3D-120, 3D-140

Program 1180
– Swinghandle and escutcheon 3E-120, 3E-140
– Rod control 3YA-480

Program 1190
– Swinghandle 3F-120
– Escutcheon 3F-220

Program 1125, 1150, 1225, 1325, 3000
– Rod control 3YA-110, 3YA-120

Program 1150
– Rod control 3YA-420, 3YA-440

Program 2100
– Rod control 3YA-520

© EMKA Beschlagteile GmbH & Co. KG • 2016 • www.emka.com

EMKA®

Beschlagteile

Rod in PA

PROGRAM 1125 - 3000

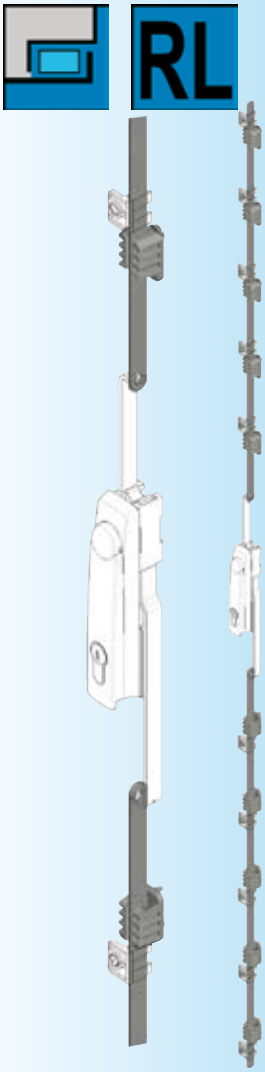

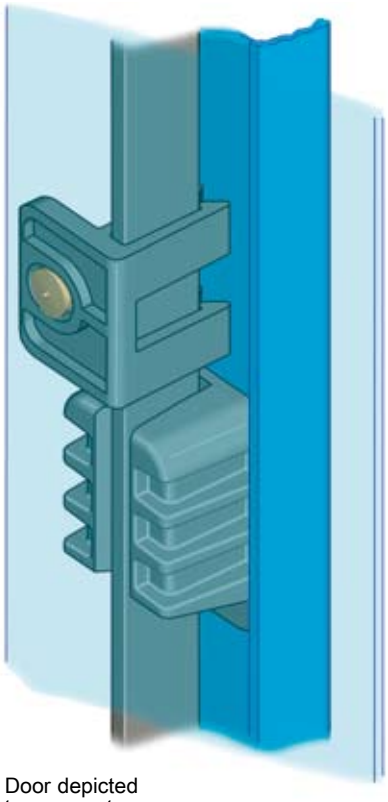

Door depicted transparent

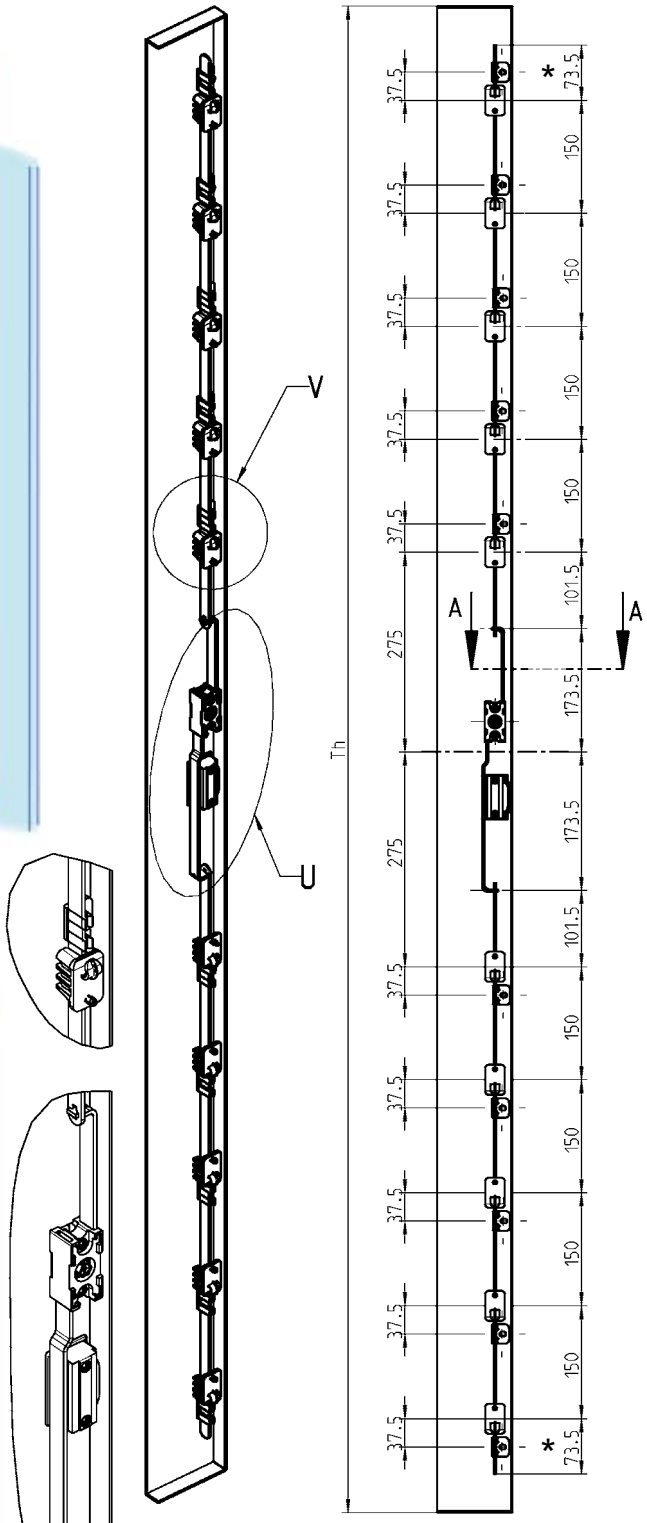

Inside door representation

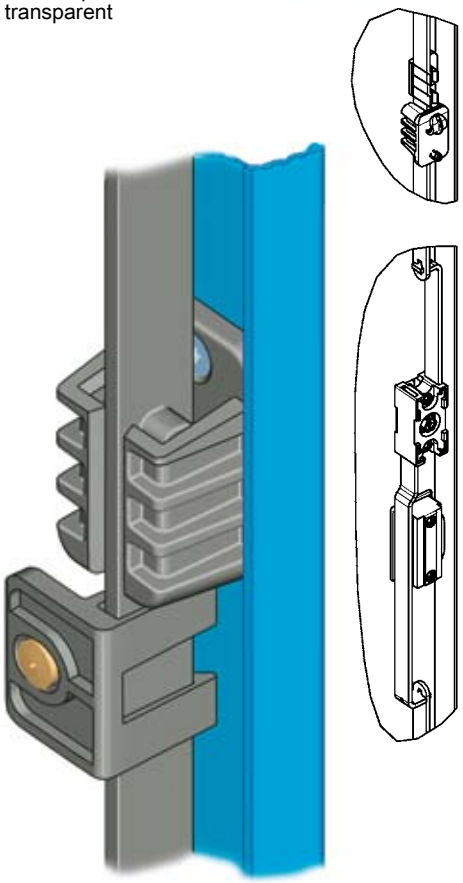

Depiction without door

* = min length in case of shortened rods

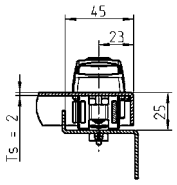

Further parts see page
- Catches 3ZA-340
- Rod guide 3ZC-120 to 3ZC-170

Program 1160
- Swinghandle and escutcheon 3D-120, 3D-140

Program 1180
- Swinghandle and escutcheon 3E-120, 3E-140
- Rod control 3YA-320

Program 1190
- Swinghandle 3F-120
- Escutcheon 3F-220

Program 1125, 1150, 1225, 1325, 3000
- Rod control 3YA-120

Program 1150
- Rod control 3YA-420, 3YA-440

Program 2100
- Rod control 3YA-520

Rod with locking slider see catalogue page 3ZA-340

© EMKA Beschlagteile GmbH & Co. KG • 2016 • www.emka.com

Rods, Catches

PROGRAM 1125 - 3000

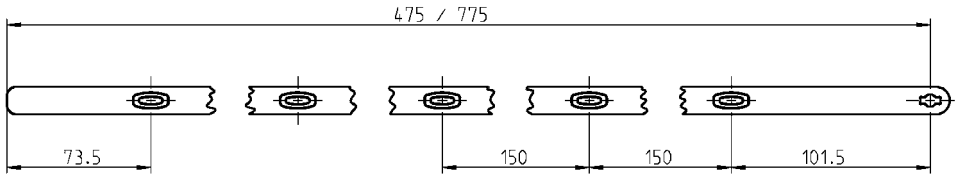

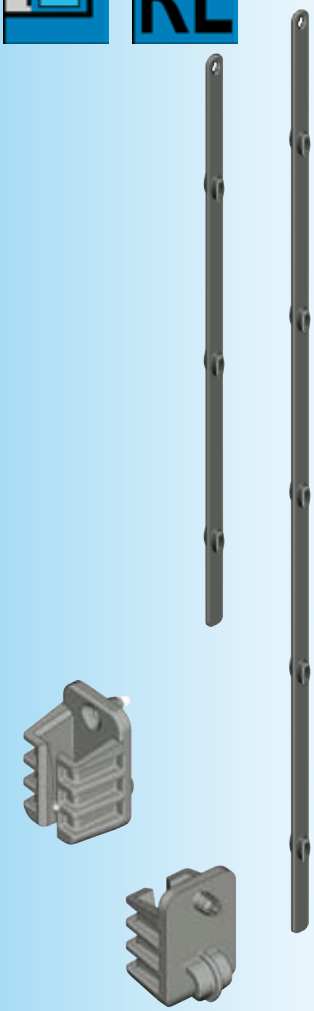

Rod with locking slider polyamide black			
Door height Th	Locking points	Rod length	* = Rod has to be shortened!
800-1300	2-3	475 *	1121-115
1300-1600	3	475	1121-115
1600-1900	4-5	775 *	1121-115-01
1900-2200	5	775	1121-115-01

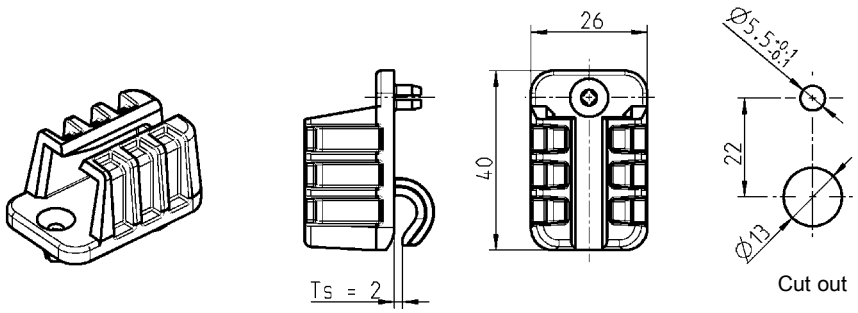

Catch polyamide black	
for counter sunk screw Ø 3,5 x 13	1121-116-01
Counter sunk screw 3,5 x 13	
	000104

Further parts see page
– Rod guide 3ZC-120 to 3ZC-170

Program 1160
– Swinghandle and escutcheon 3D-120, 3D-140

Program 1180
– Swinghandle and escutcheon 3E-120, 3E-140
– Rod control 3YA-320

Program 1190
– Swinghandle 3F-120
– Escutcheon 3F-220

Program 1125, 1150, 1225, 1325, 3000
– Rod control 3YA-120

Program 1150
– Rod control 3YA-420, 3YA-440

Program 2100
– Rod control 3YA-520

© EMKA Beschlagteile GmbH & Co. KG • 2016 • www.emka.com

EMKA®

Beschlagteile

Twisted rod

PROGRAM 1160

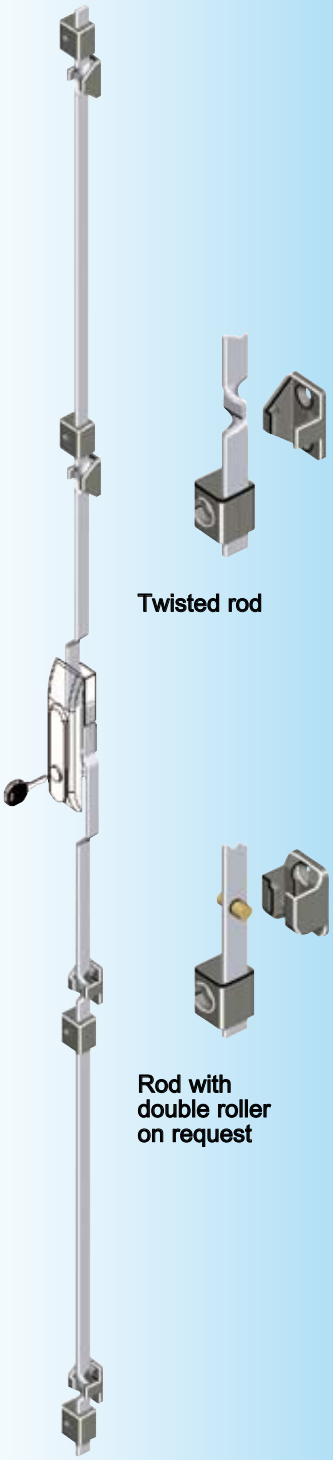

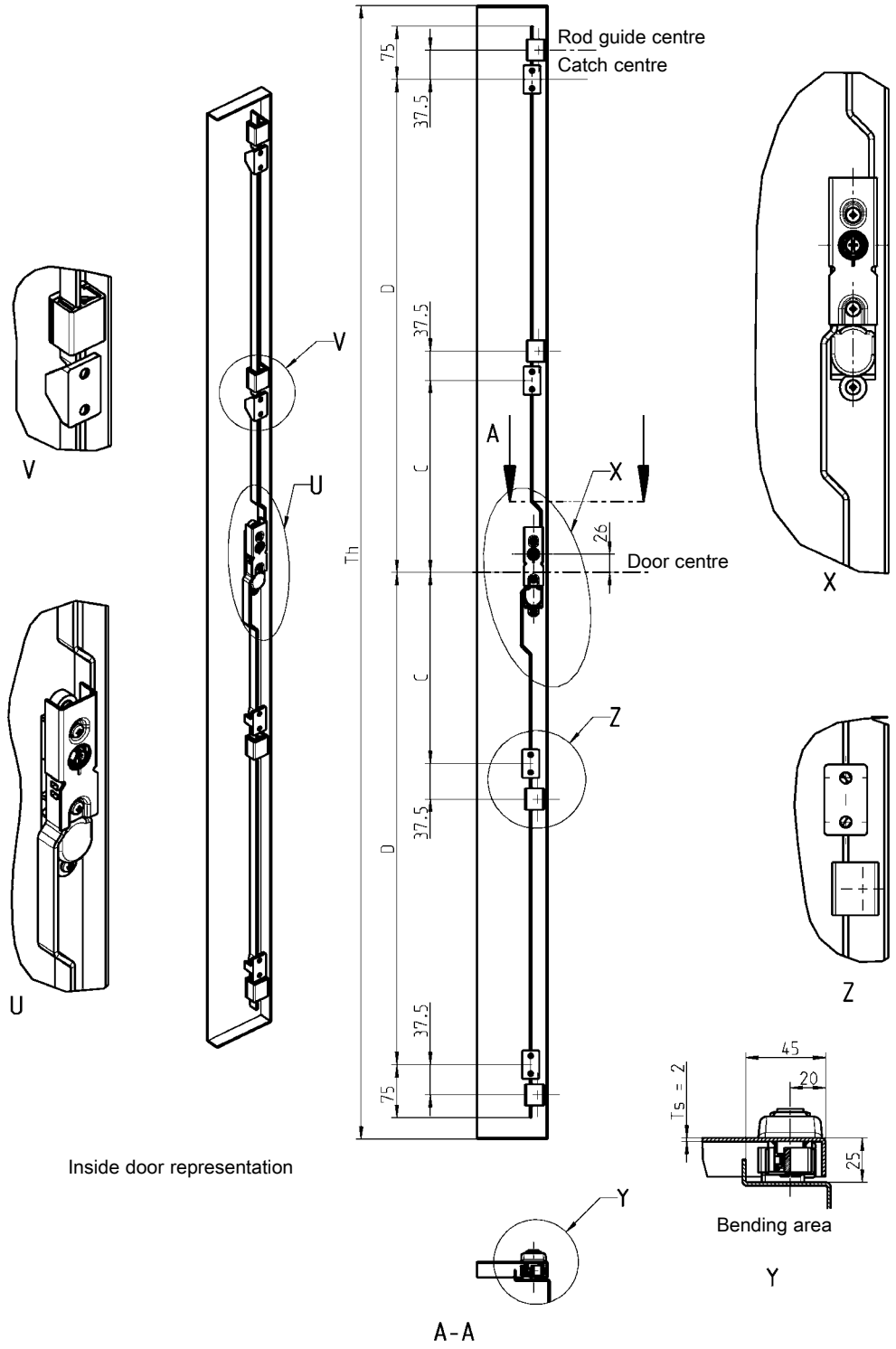

Door height	Locking points (door centre)		Part no. Rods Upper rod		Part no. Rods Lower rod	
Th	Dim. C	Dim. D	m.s. zinc pl.	alum.	m.s. zinc pl.	alum.
800-1200	–	300	1160-08-01RA	on request	1160-09-01RA	on request
1200-1600	–	450	1160-08-03RA	on request	1160-09-03RA	on request
1600-1900	275	700	1160-08-05RA	on request	1160-09-05RA	on request
1900-2200	275	850	1160-08-07RA	on request	1160-09-07RA	on request

Further parts see page
– Catches 3ZA-1220
– Rod guide 3ZC-120 to 3ZC-170

Program 1160
– Swinghandle and escutcheon 3D-220

© EMKA Beschlagteile GmbH & Co. KG • 2016 • www.emka.com

Twisted rod

PROGRAM 1180

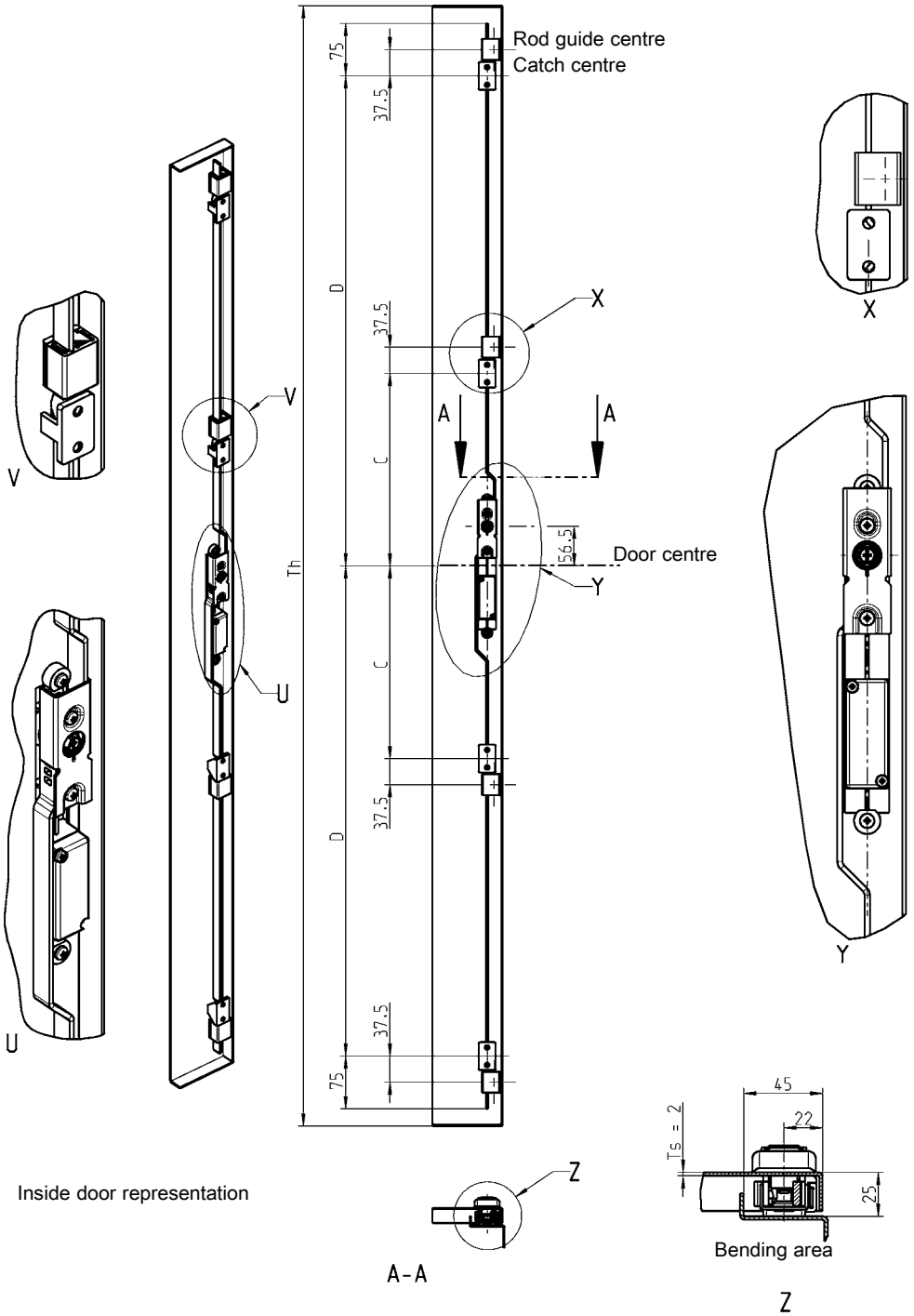

Inside door representation

Bending area

Twisted rod

Rod with double roller on request

Door height	Locking points (door centre)		Part no. Rods Upper rod		Part no. Rods Lower rod	
Th	Dim. C	Dim. D	m.s. zinc pl.	alum.	m.s. zinc pl.	alum.
800-1200	–	300	1180-08-01RA	on request	1180-09-01RA	on request
1200-1600	–	450	1180-08-03RA	on request	1180-09-03RA	on request
1600-1900	275	700	1180-08-05RA	on request	1180-09-05RA	on request
1900-2200	275	850	1180-08-07RA	on request	1180-09-07RA	on request

Further parts see page
– Catches 3ZA-1220
– Rod guide 3ZC-120 to 3ZC-170

Program 1180
– Swinghandle and escutcheon 3E-220

© EMKA Beschlagteile GmbH & Co. KG • 2016 • www.emka.com

EMKA®

Beschlagteile

Twisted rod

PROGRAM 1190

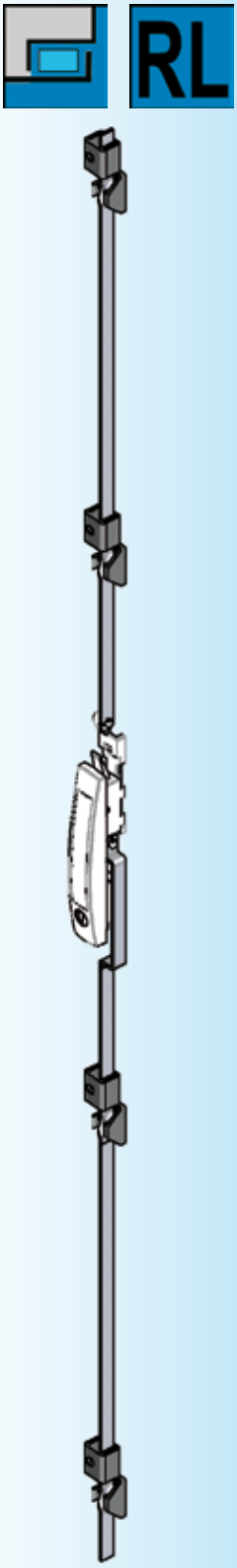

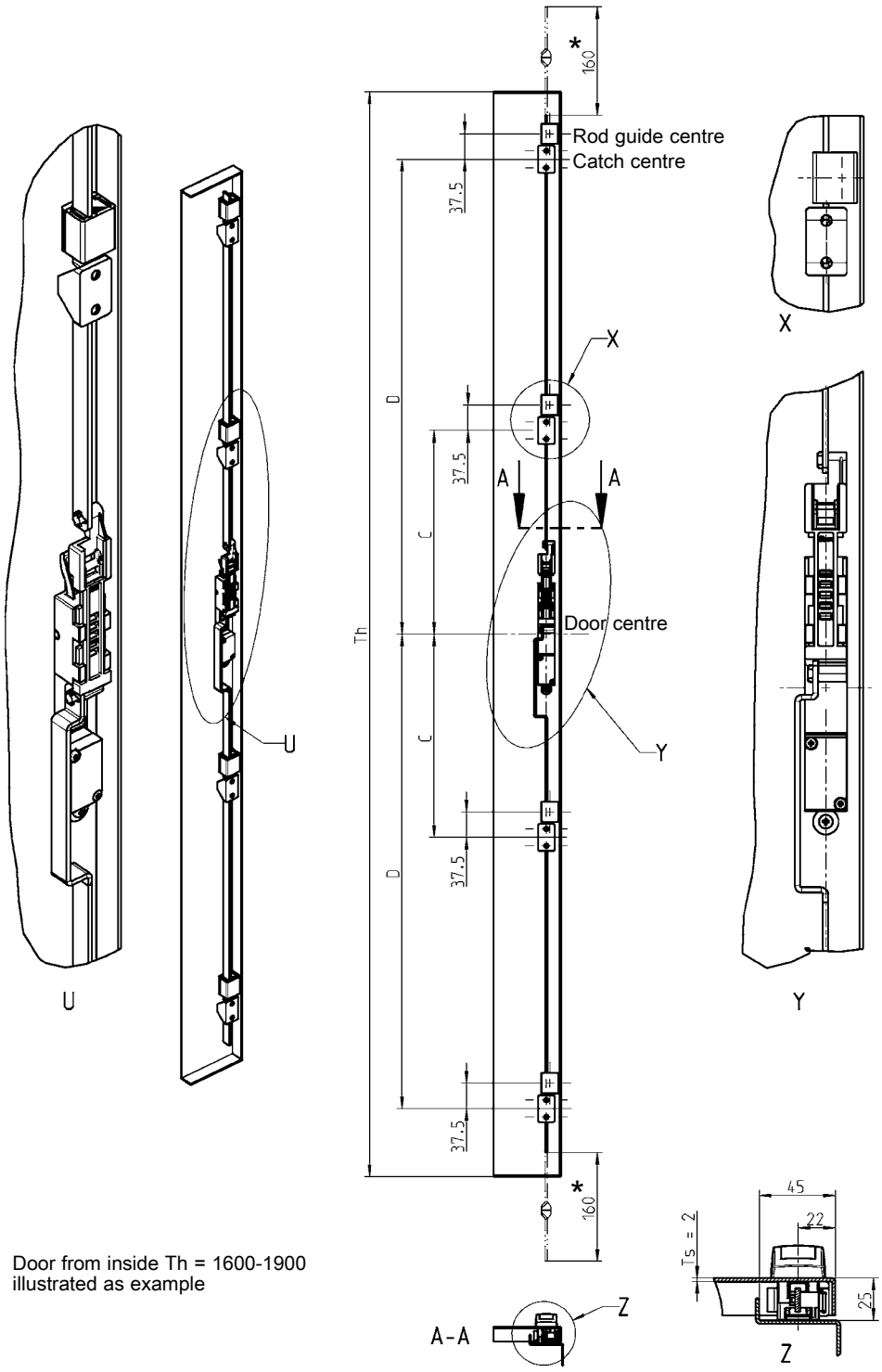

Door from inside Th = 1600-1900 illustrated as example

Bending area

* Flat rod has to be shortened

Further parts see page
– Catches 3ZA-1220
– Rod guide 3ZC-120 up to 3ZC-170

Program 1190
– Swinghandle 3F-320, 3F-330

Door height	Locking points (door centre)		Part No. Rods Upper rod		Part no. Rods Lower rod	
Th	Dim. C	Dim. D	m.s. zinc pl.	alum.	m.s. zinc pl.	alum.
800-1200	–	300	1190-25-01JB*	1190-25-01TA*	1190-25-02JB*	1190-25-02TA*
1200-1600	–	450	1190-25-01JB	1190-25-01TA	1190-25-02JB	1190-25-02TA
1600-1900	300	700	1190-27-01JB*	1190-27-01TA*	1190-27-02JB*	1190-27-02TA*
1900-2200	300	850	1190-27-01JB	1190-27-01TA	1190-27-02JB	1190-27-02TA

© EMKA Beschlagteile GmbH & Co. KG • 2016 • www.emka.com

Twisted rod

PROGRAM 2400

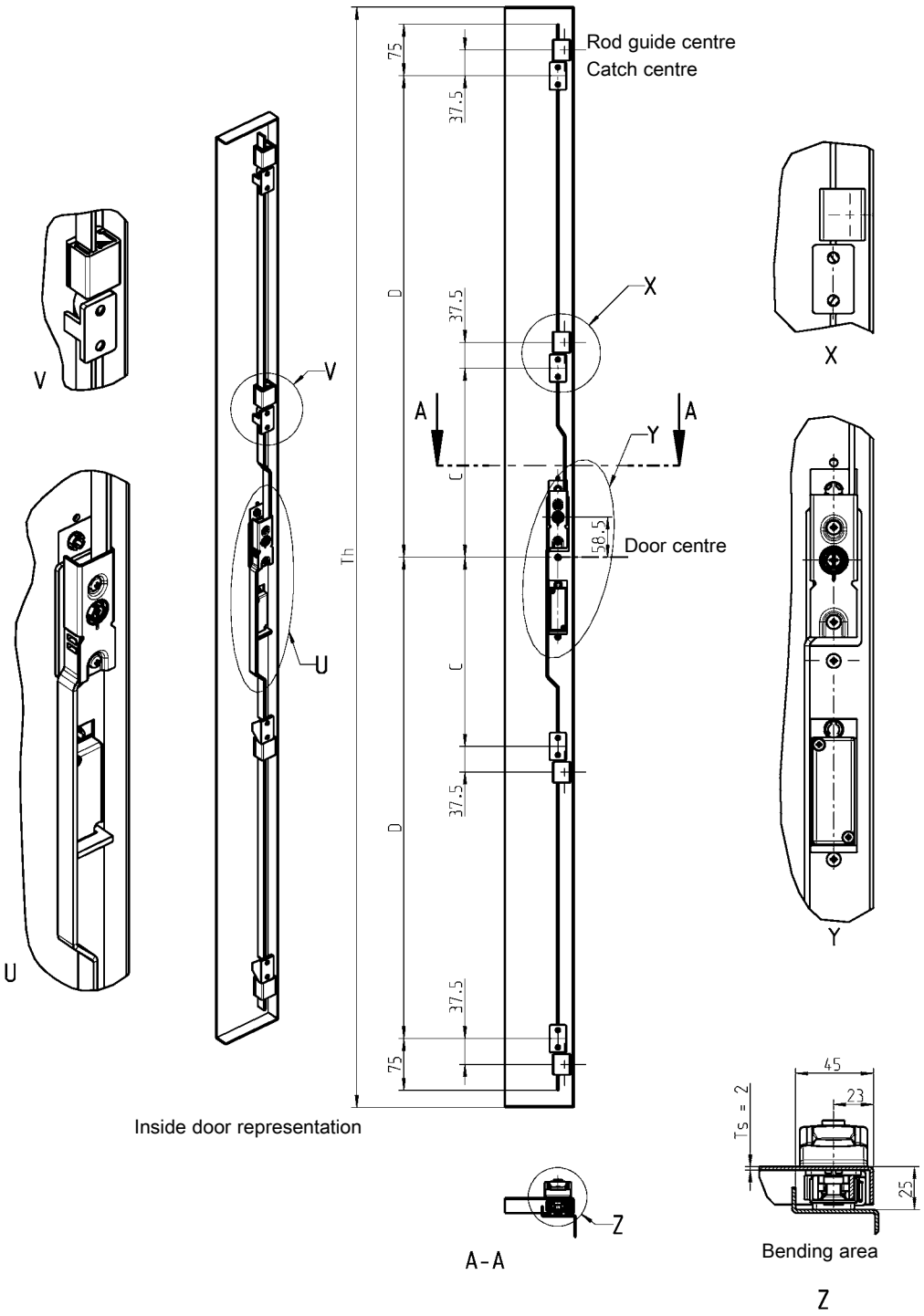

Door height	Locking points (door centre)		Part No. Rods Upper rod		Part No. Rods Lower rod	
Th	Dim. C	Dim. D	m.s. zinc pl.	alum.	m.s. zinc pl.	alum.
800-1200	–	300	2400-19-01RA	on request	2400-18-01RA	on request
1200-1600	–	450	2400-19-03RA	on request	2400-18-03RA	on request
1600-1900	275	700	2400-19-05RA	on request	2400-18-05RA	on request
1900-2200	275	850	2400-19-07RA	on request	2400-18-07RA	on request

Further parts see page
– Catches 3ZA-1220
– Rod guide 3ZC-120
up to 3ZC-170

Program 2400
– Escutcheon 3K-220

© EMKA Beschlagteile GmbH & Co. KG • 2016 • www.emka.com

Rods for narrow door return

PROGRAM 1325

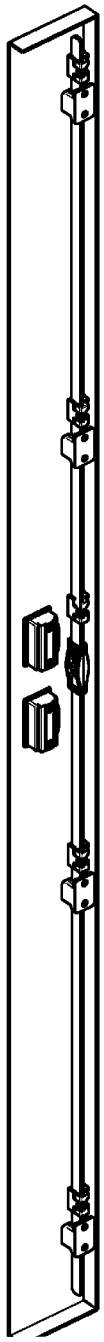

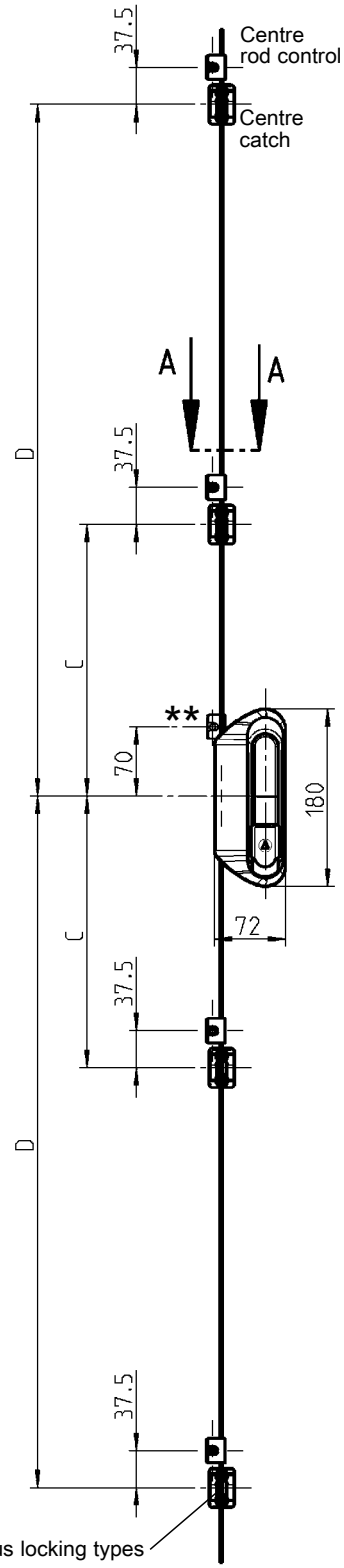

depicted without door

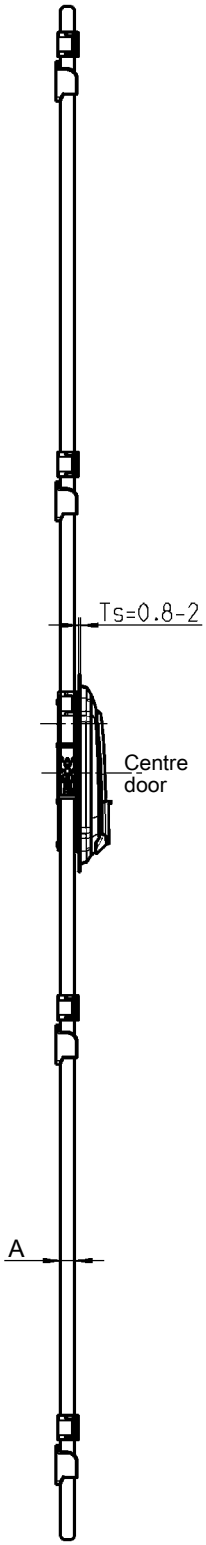

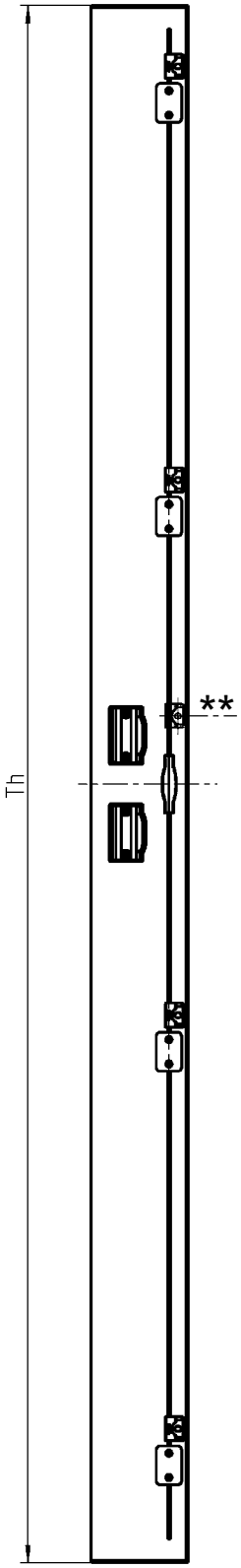

Door depicted from inside

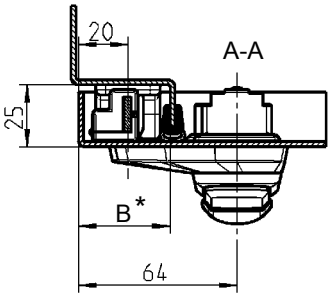

Dim. A	Flat rod 14x3	
Locking type (see right)	Dimension B	
	without seal	with seal*
1	30	33
2	30	33
3	34	37

* The values in the table for dimension B with seal refer to the seal 1011-10. Other seals result in different values for dimension B.

© EMKA Beschlagteile GmbH & Co. KG • 2016 • www.emka.com

Locking types

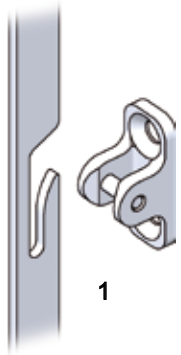

Rod with cut out

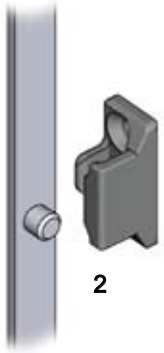

Rod with single roller

Rod with double roller

Locking type	Item	Page	Item no.
1	Catch	3ZA-1220	1121-U76
	Rod control	3ZC-120 3ZC-140	1121-89-11 1121-106
	rod control with cutout	see below	
	Hinge	① see bottom right corner	
2	Catch	-	2600-12
	Rod control	3ZC-120 3ZC-140	1121-89-11 1121-106
	rod control with single roll	see below	
	Hinge	① see bottom right corner	
3	Catch	3ZA-1220	1121-18-02
	Rod guide	3ZC-120 3ZC-140	1121-89-11 1121-106
	Rod with double roller	see below	
	Hinge	① see bottom right corner	

Rod 14x3 m.s. zinc plated

Door height Th	Locking points (door centre) Dim. C	Dim. D	Locking type	Item no.
800-1200	–	300	1 (rod top)	1325-15-01JB
			1 (rod bottom)	1325-14-01JB
			2	on request
			3	on request
1200-1600	–	450	1 (rod top)	1325-15-03JB
			1 (rod bottom)	1325-14-03JB
			2	on request
			3	on request
1600-1900	275	700	1 (rod top)	1325-15-05JB
			1 (rod bottom)	1325-14-05JB
			2	on request
			3	on request
1900-2200	275	850	1 (rod top)	1325-15-07JB
			1 (rod bottom)	1325-14-07JB
			2	on request
			3	on request

① Fixing of hinge with countersunk screws

** **Note:**
additional rod guides necessary for door height up to 1600 mm

Further parts see page

Hinge suitable for the locking types 1, 2 and 3
– 125° hinge 4A-136
– 180° hinge (bottom) 4A-140
– 180° hinge 4A-145

also suitable for locking type 3
– 180° hinge (26 mm door return) 4A-170
– 180° hinge (26 mm door return) 4A-210

Program 1325
– Swing handle for narrow bending area 3BA-320

© EMKA Beschlagteile GmbH & Co. KG • 2016 • www.emka.com

Rod controls for small clearance

PROGRAM 1325

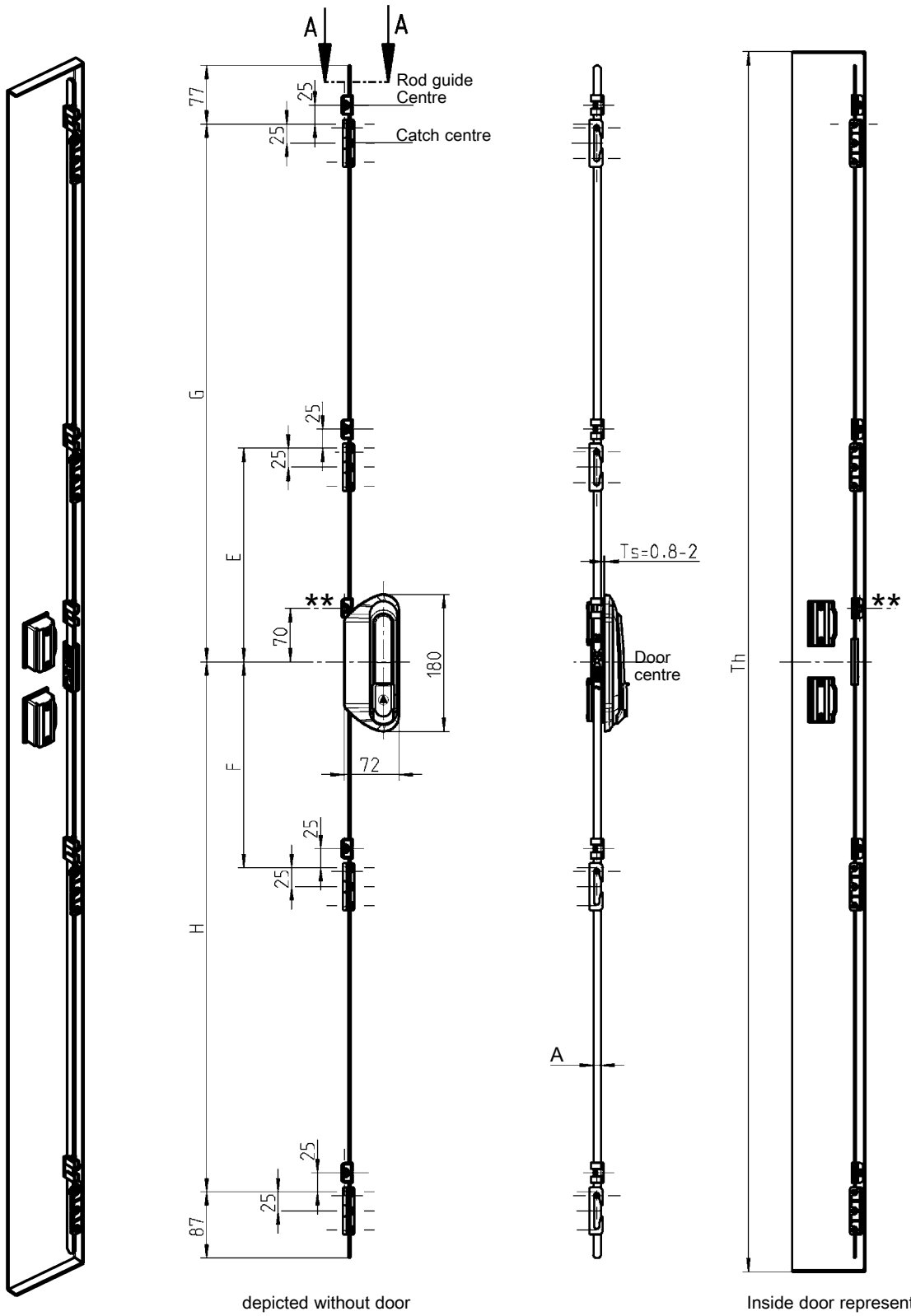

depicted without door

Inside door representation

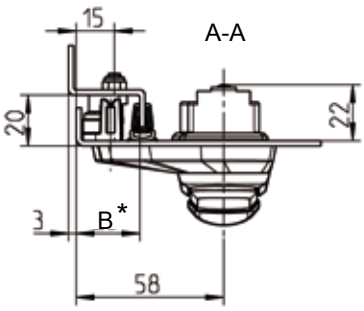

Dimension A	Flat rod 10x3	
Locking type (see right)	Dimension B	
	without seal	with seal*
	22	25

* The values in the table for dimension B with seal refer to the seal 1011-10. Other seals result in different values for dimension B.

© EMKA Beschlagteile GmbH & Co. KG • 2016 • www.emka.com

Locking type and rod control

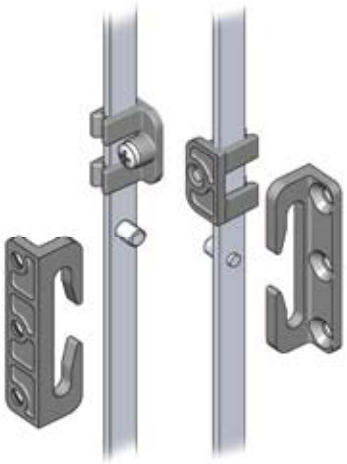

130° concealed hinge

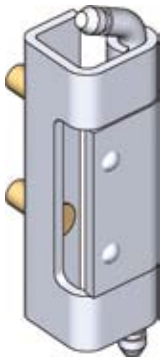

180° prominent hinge

Article	Material	Part no.
Swinghandle	see catalogue page 3BA-320	1325-U202
Catches	zinc-die black powder-coated for countersunk screw M5	1121-149
Rod guide	polyamide black for weld studs Ø 6x8-M4	1121-148
Rod	see below	
130° concealed hinge	Frame part m. s. zinc-plated with pressed-in grub screws M5x12; hinge roll m. s. crude for welding on; pin m. s. zinc-plated	on request
180° prominent hinge	zinc-die black powder-coated; fixing pin polyamide GF black; hinge pin stainless steel and disc brass	on request

Rod 10x3 m.s. zinc plated					
Door height	Locking points (door centre)				Part no.
Th	Dim. E	Dim. F	Dim. G	Dim. H	
800-1200	–	–	305	295	1325-U220-01
1200-1600	–	–	455	445	1325-U220-03
1600-1900	280	270	705	695	1325-U220-05
1900-2200	280	270	855	845	1325-U220-07

** Note:
additional rod guides necessary for door height up to 1600 mm

Further parts see page

Program 1325
– Swing handle for narrow bending area 3BA-320

Rods for narrow door return

PROGRAM 1390

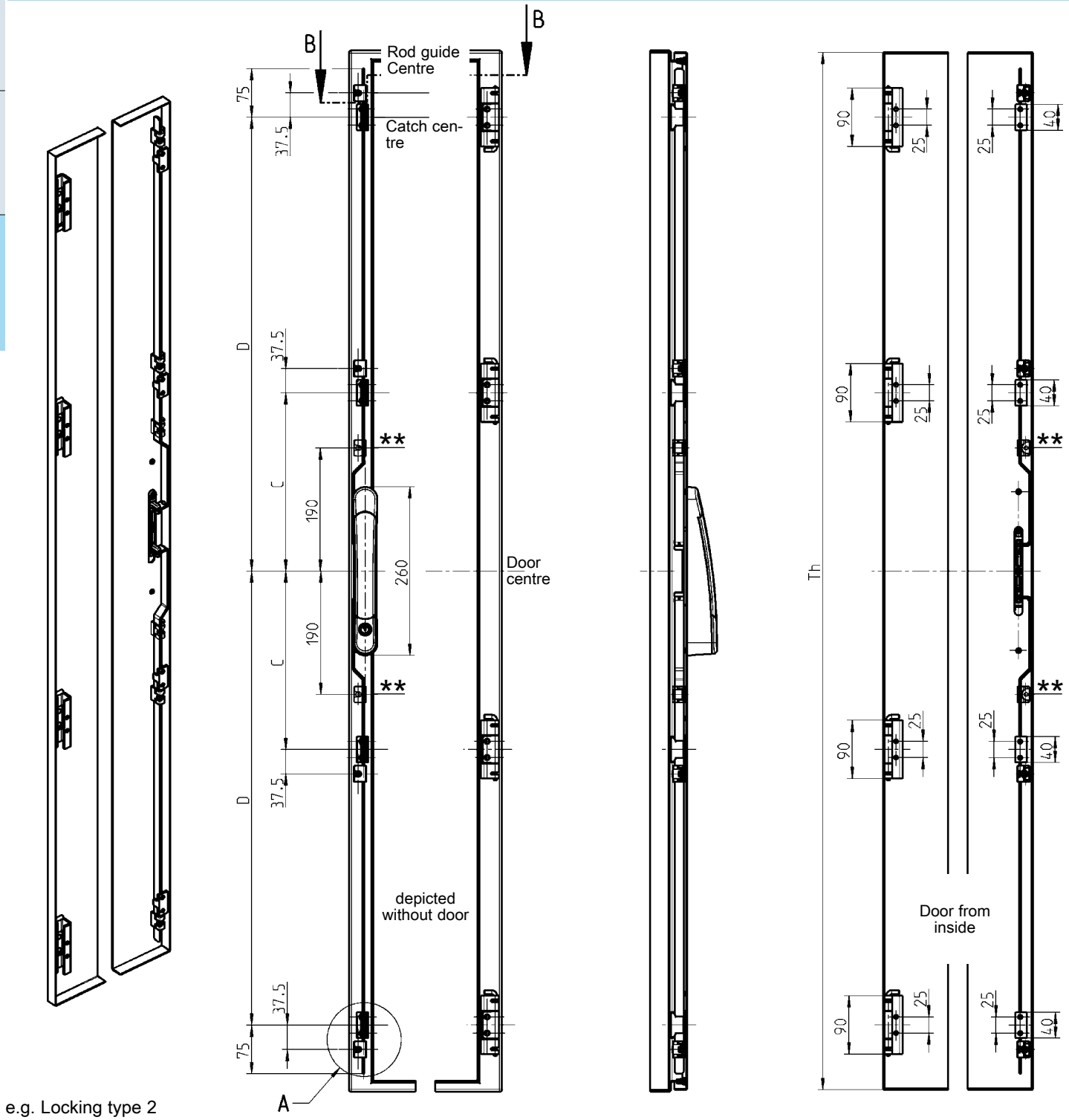

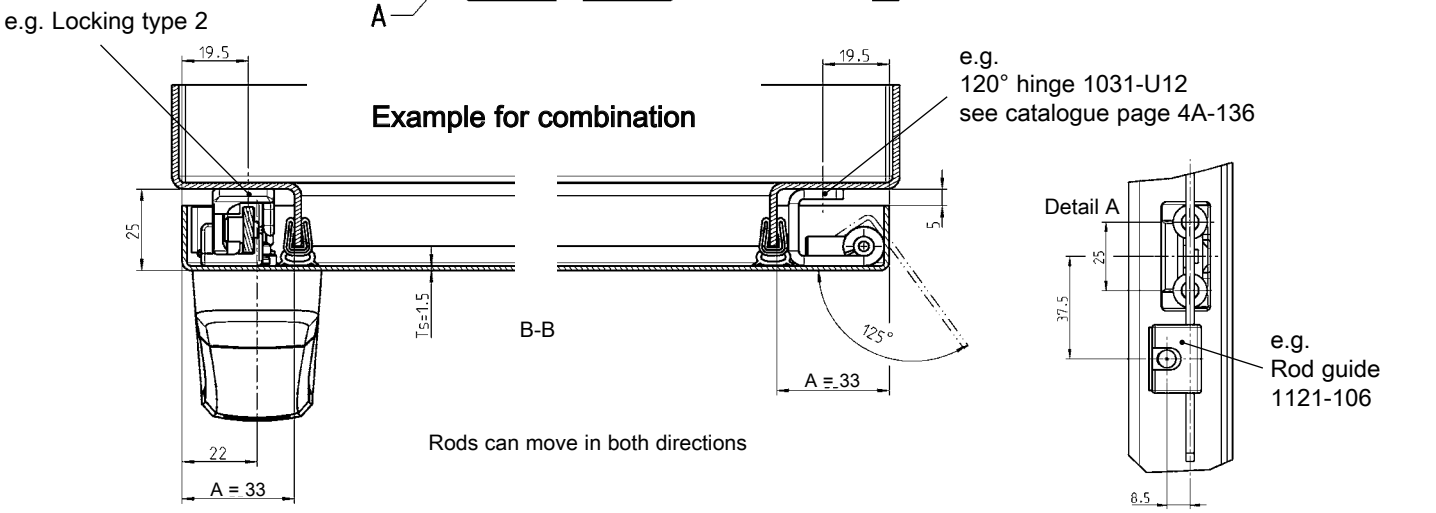

RL

Locking types

Rod with cut out

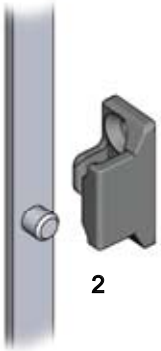

Rod with single roller

Rod with double roller

Locking option	Dimen-sion A	Article	Catalogue page	Part no.
1	33	Catches	* 3ZA-1220	1121-U76
		Rod guide	3ZC-120 3ZC-140	1121-89-11 1121-106
		Rod with cut out	see below	
		Hinge	* see bottom right corner	
2	33	Catches	* -	2600-12
		Rod guide	3ZC-120 3ZC-140	1121-89-11 1121-106
		rod control with single roll	see below	
		Hinge	* see bottom right corner	
3	37	Catch	* 3ZA-1220	1121-18-02
		Rod guide	3ZC-120 3ZC-140	1121-89-11 1121-106
		rod control with double roll	see below	
		Hinge	* see bottom right corner	

* Fixing with countersunk screws acc. to DIN ISO 2009, 2010, 7046-1, 7046-2, 7047

** Note:
additional rod guides necessary for door height up to 1600 mm

Door height	Locking points (door centre)		Rod		
			Locking option	Part no.	
Th	Dim. C	Dim. D		Upper rod	Lower rod
** 800-1200	–	300	1	1390-11-01JB	1390-12-01JB
			2	1390-U10-01	
			3	1390-U11-01	
** 1200-1600	–	450	1	1390-11-03JB	1390-12-03JB
			2	1390-U10-03	
			3	1390-U11-03	
1600-1900	275	700	1	1390-11-05JB	1390-12-05JB
			2	1390-U10-05	
			3	1390-U11-05	
1900-2200	275	850	1	1390-11-07JB	1390-12-07JB
			2	1390-U10-07	
			3	1390-U11-07	

Further parts see page

Hinge suitable for the locking types 1, 2 and 3

– 125° hinge	4A-136
– 180° hinge (bottom)	4A-140
– 180° hinge	4A-145
– 180° hinge (bottom)	4A-170
– 180° hinge (26 mm door return)	4A-210
– 180° hinge	4A-215

Program 1390

– Lifthandle for small clearance	3FA-120

© EMKA Beschlagteile GmbH & Co. KG • 2016 • www.emka.com

EMKA®

Beschlagteile

90° turn for rods

PROGRAM 1125 - 3000

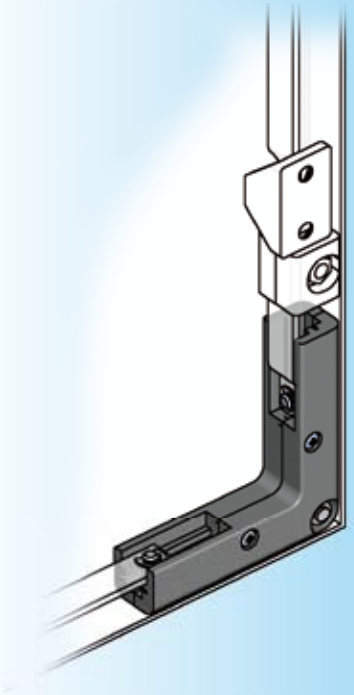

Door pictured transparent

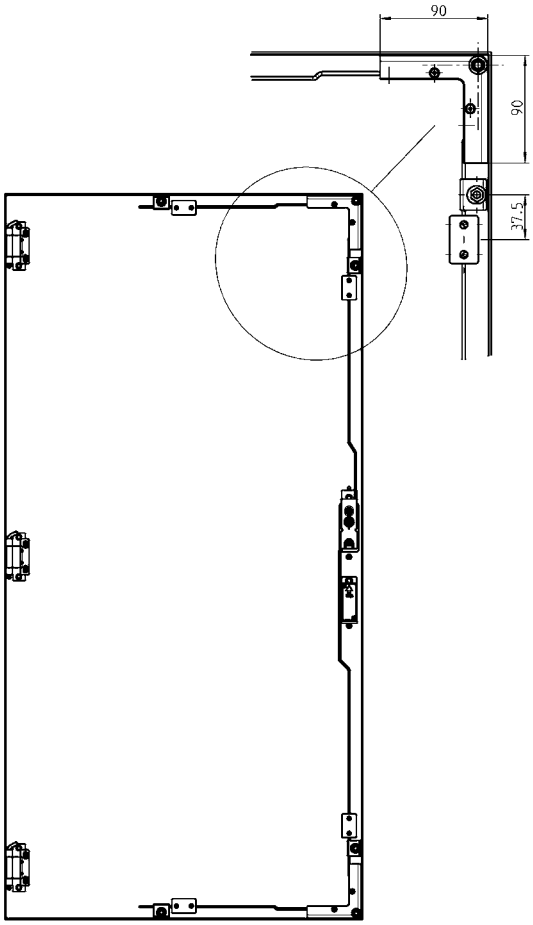

Inside door representation

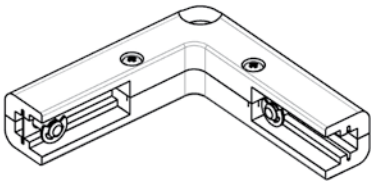

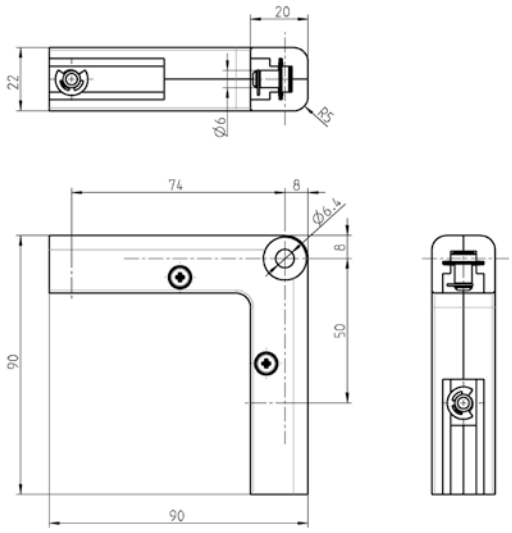

Rods suitable for the programs
1125, 1150, 1160, 1180, 1190,
1225,
1325, 2100, 2400 and 3000
as requested individually!

Further parts see page
– Rods without 90° turn 3ZA-120

90° turn polyamide black, drive spring steel zinc plated	
for weld stud M6x20	1121-U170

© EMKA Beschlagteile GmbH & Co. KG • 2016 • www.emka.com

Rod with double roll for catch with bracket and extended catch area

PROGRAM 1125 - 3000

Product benefits

- the bracket increases the catch area from 8.5 mm to 13 mm
- ensures that the double roll is hooked in the catch before the seal is compressed
- fixing with only one screw instead of two
- exchangeable with the previous catch 1121-18-02
- rod control remains in former position
- can be closed very conveniently
- patented!

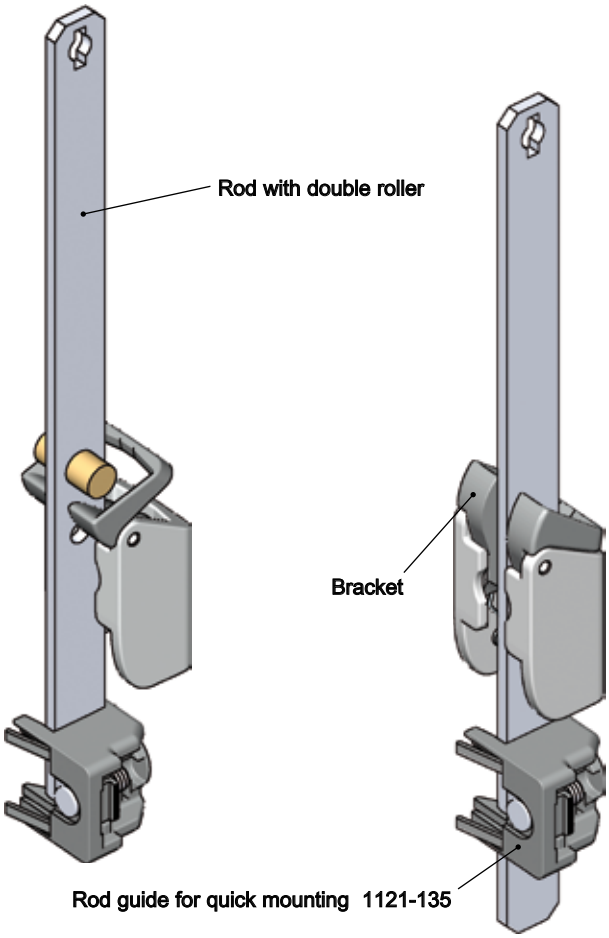

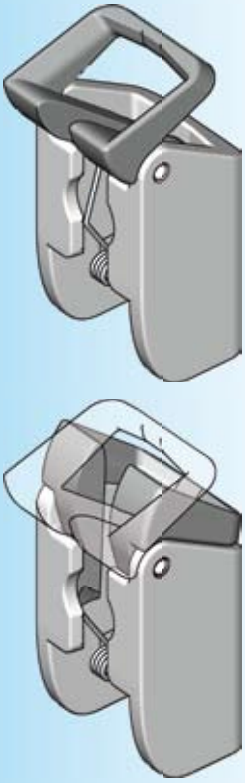

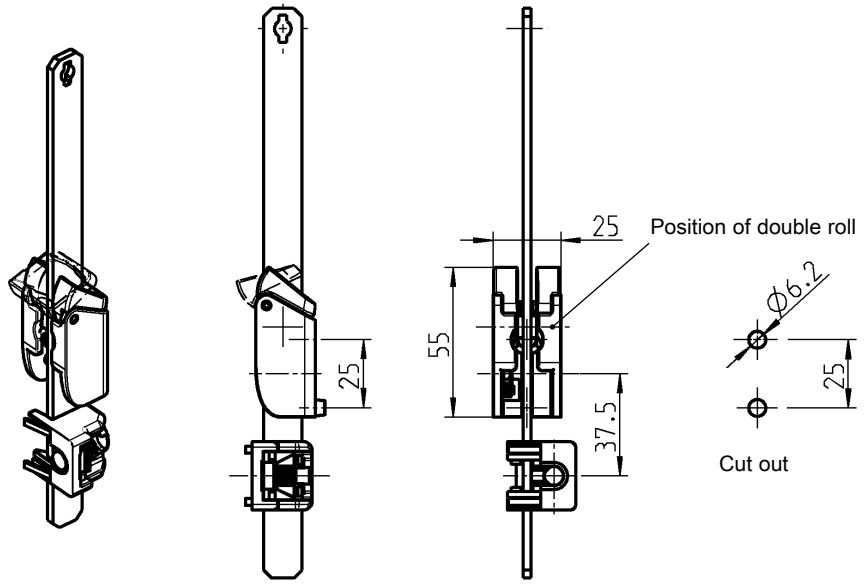

Note:
For dimensions see table on catalogue page 3ZA-120

Further parts see page
– Rod guide 3ZC-120 up to 3ZC-170

Program 1160
– Swinghandle and escutcheon 3D-120, 3D-140

Program 1180
– Swinghandle and escutcheon 3E-120, 3E-140
– Rod control 3YA-480

Program 1190
– Swinghandle 3F-120
– Escutcheon 3F-220

Program 1125, 1150, 1225, 1325, 3000
– Rod control 3YA-110, 3YA-120

Program 1150
– Rod control 3YA-420, 3YA-440

Program 2100
– Rod control 3YA-520

Door height	Rods		Locking points (door centre)		Rod control m.s. zinc-plated; double roll, brass
Th	Dim. X	Dim. Y	Dim. C	Dim. D	
800-1200	–	126,5	–	300	1121-U155-01
1200-1600	–	276,5	–	450	1121-U158-01
1600-1900	101,5	526,5	275	700	1121-U161-01
1900-2200	101,5	676,5	275	850	1121-U164-01
Catch zinc-die zinc-plated for rod with double roll; bracket polyamide GF black; with spring					
					1121-U194

© EMKA Beschlagteile GmbH & Co. KG • 2016 • www.emka.com

Catches

PROGRAM 1125, 1150, 1160, 1180, 1225, 1325, 2100, 2400, 3000

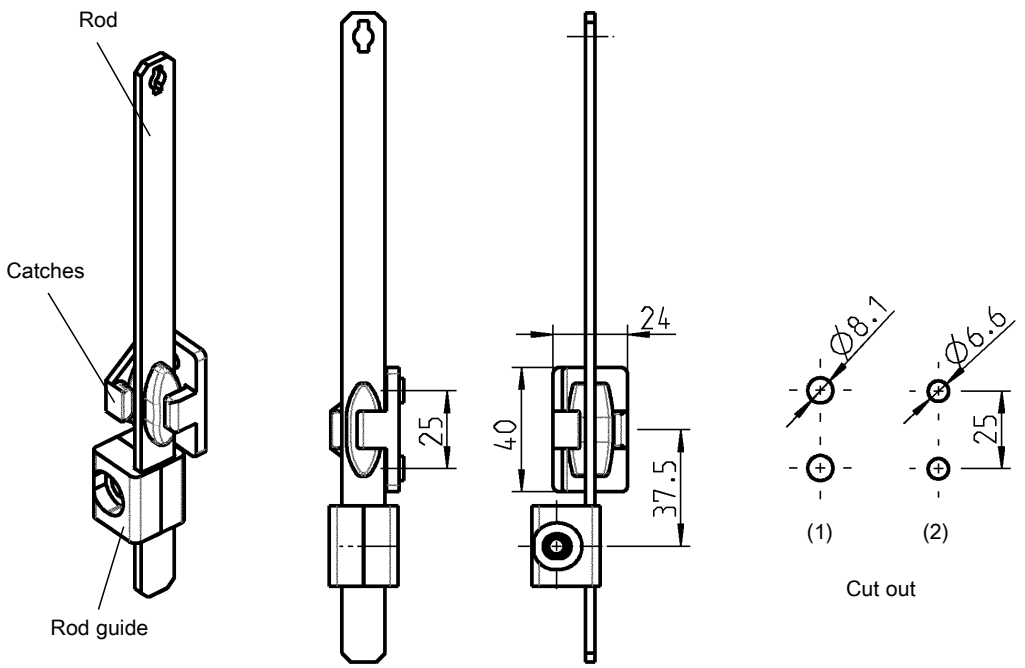

Catch interchangeable with hinge 120°, catalogue page 4A-190 or hinge 180° catalogue page 4A-210

Catch zinc die black powder coated for rod with locking slider		
with M6 female thread	(1)	1121-54-P
for counter sunk srew (2D-nut applicable)	(2)	1121-53-P

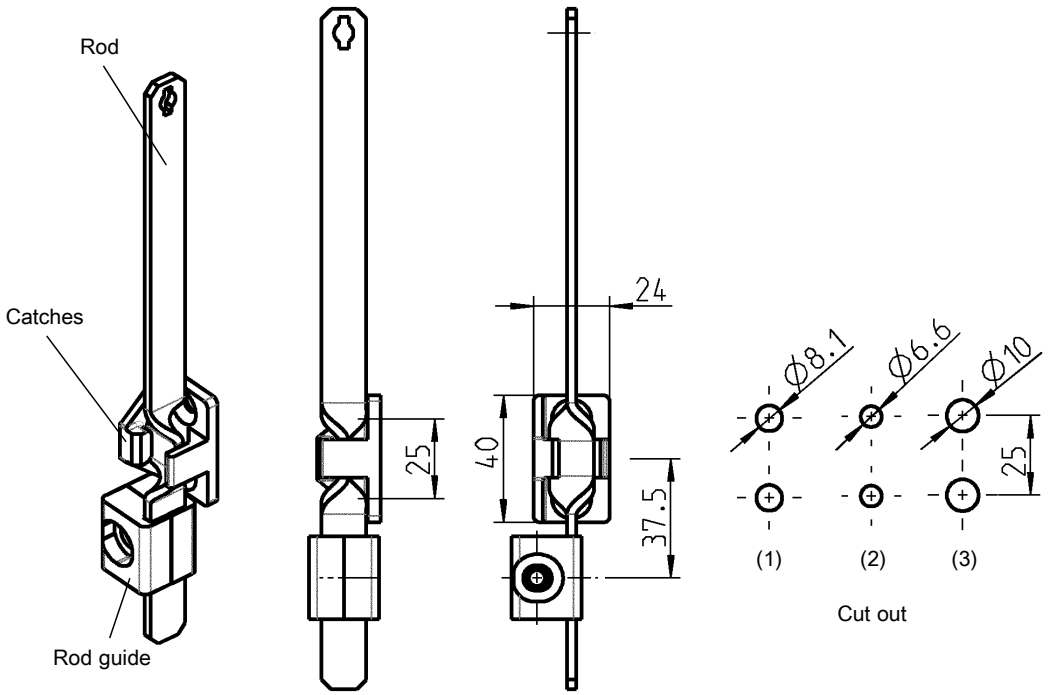

Catch interchangeable with hinge 120°,catalogue page 4A-190 or hinge catalogue page 4A-210

Catch zinc die black powder coated for twisted rod		
with M6 female thread	(1)	1121-70-01
for counter sunk screw M6 (2D-nut applicable)	(2)	1121-70
with clamping pin, polyamide black, Ts = 2,0	(3)	1121-U137
with M10 outside threat, nut m.s. zinc plated	(3)	1121-U152
Catch polyamide 66 GF 50 black for twisted rod		
for counter sunk screw M6 (2D-nut applicable)	(2)	1121-70-04SK

© EMKA Beschlagteile GmbH & Co. KG • 2016 • www.emka.com

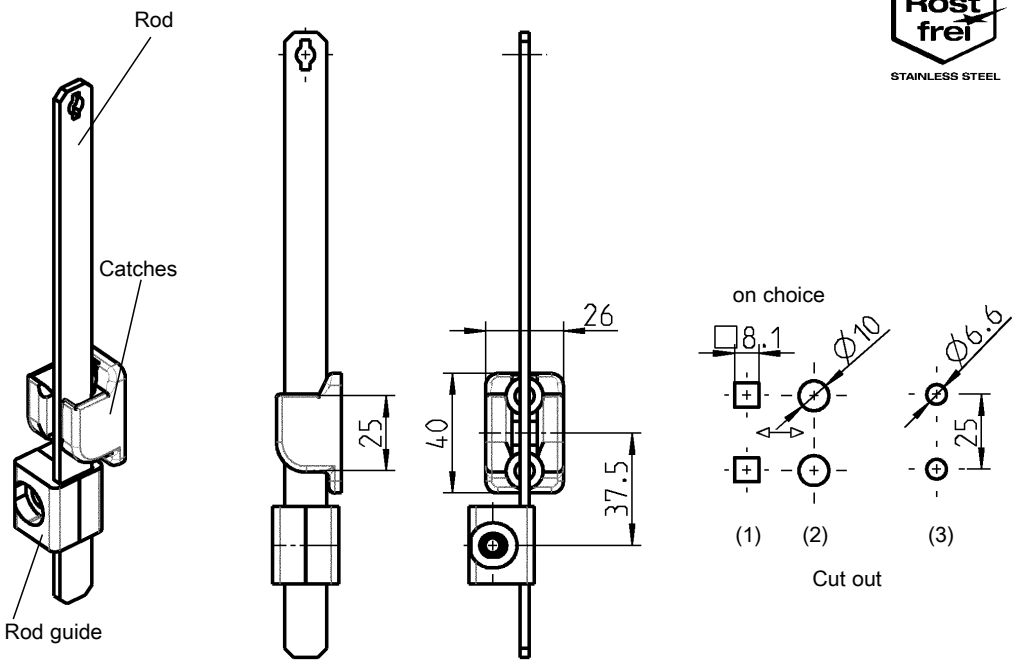

Catch zinc die black powder coated for rod with double roller		
with M6 female thread	(1) (2)	1121-18-01
for counter sunk screw M6 (2D-nut applicable)	(3)	1121-18-02
Catch AISI 316 for rod with double roller		
for counter sunk screw M6 (2D-nut applicable)	(3)	1121-18-02PH

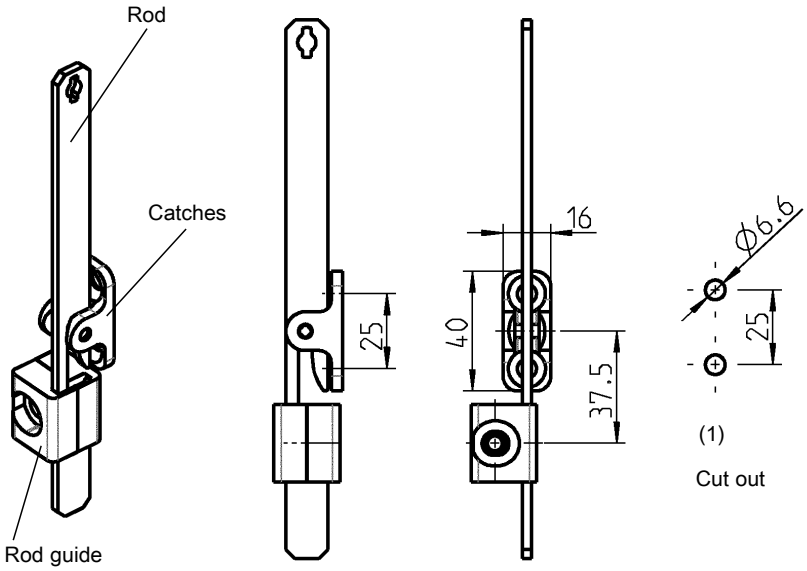

Catch interchangeable with hinge 120° catalogue page 4A-190 or hinge 180° catalogue page 4A-210

Catch zinc die black powder coated for rod with cut out		
for countersunk screw small head M6 (2D nut usable)	(1)	1121-U76

4 different fixing possibilities

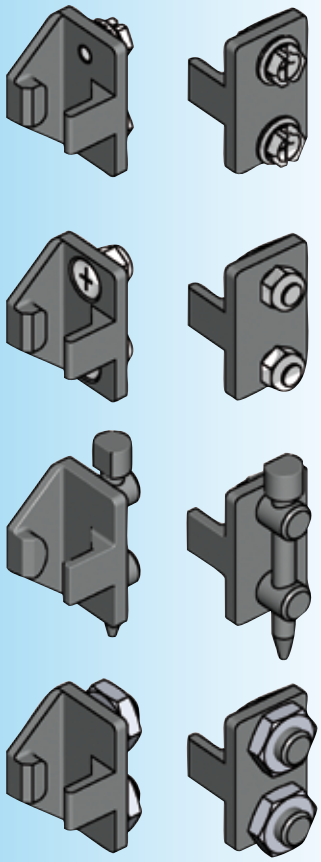

small head = DIN ISO 2009, 2010, 7046-1, 7046-2, 7047

Further parts see page
– 2D-nut 12E-120
Program 1125, 1150, 1160, 1180, 1190, 1225, 1325, 2100, 3000
– Rods 3ZA-120
Program 1160
– Rod locks 3ZA-420
Program 1180
– Lock rods 3ZA-520
Program 1190
– Rods 3ZA-560
Program 2400
– Rods 3ZA-820

© EMKA Beschlagteile GmbH & Co. KG • 2016 • www.emka.com

EMKA

Beschlagteile

®Catch for rod with double roller or single roller

PROGRAM 1125 - 3000

RL

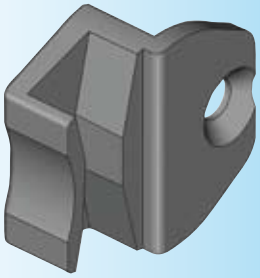

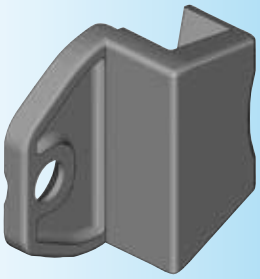

Lateral fixing to the frame inside the gasketing

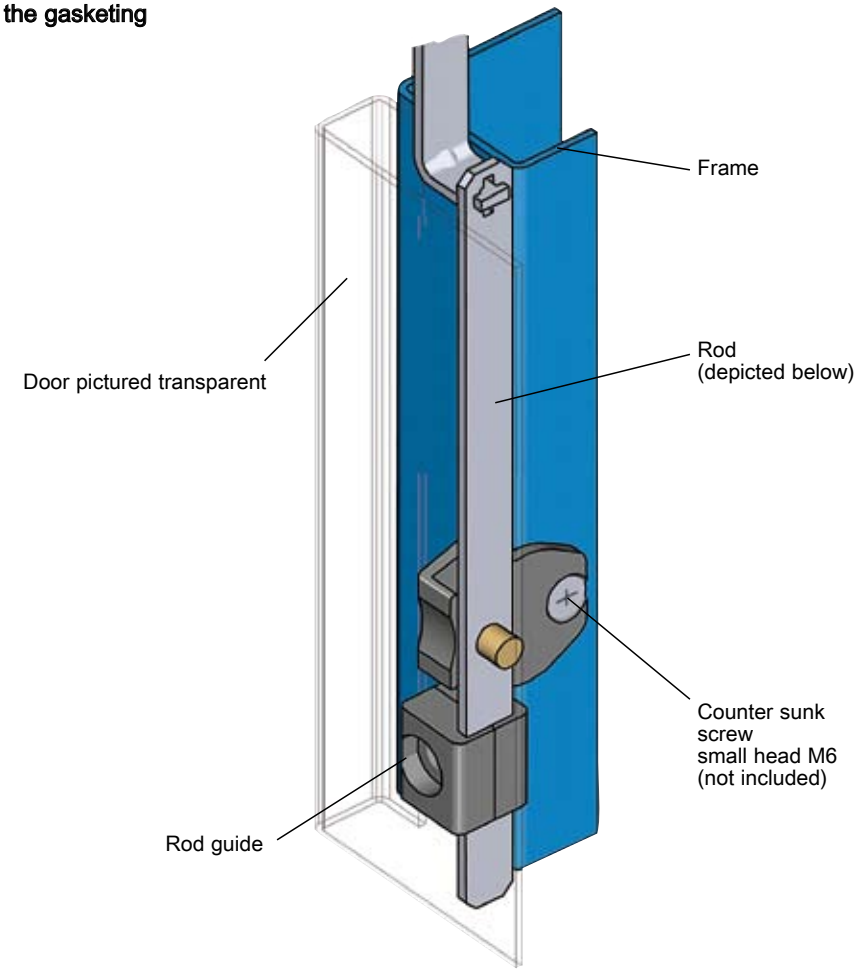

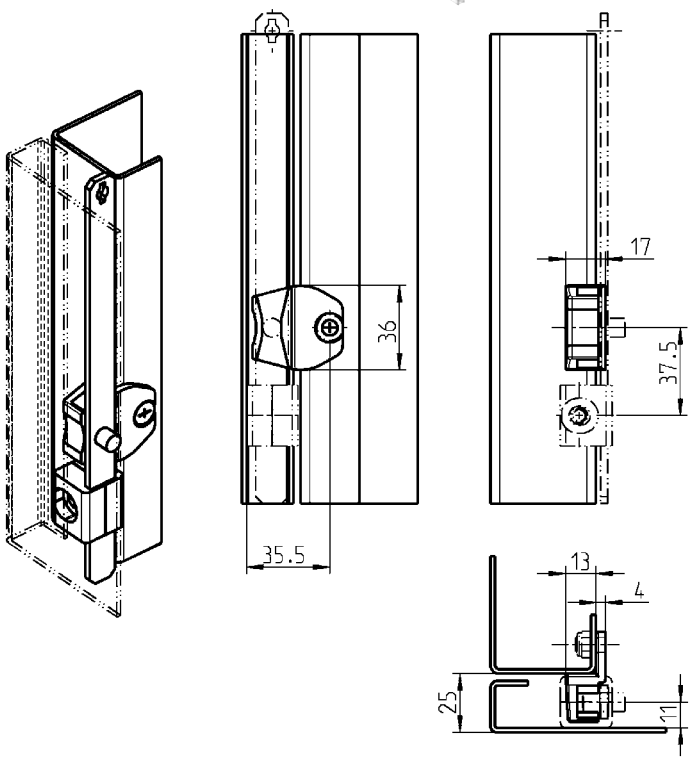

small head = DIN ISO 2009, 2010, 7046-1, 7046-2, 7047

Further parts see page

Program 1125, 1150, 1160, 1180, 1190, 1225, 1325, 2100, 3000
– Rods 3ZA-260

Catch zinc die black powder coated

1121-108-AA

© EMKA Beschlagteile GmbH & Co. KG • 2016 • www.emka.com

Rod within the gasketing

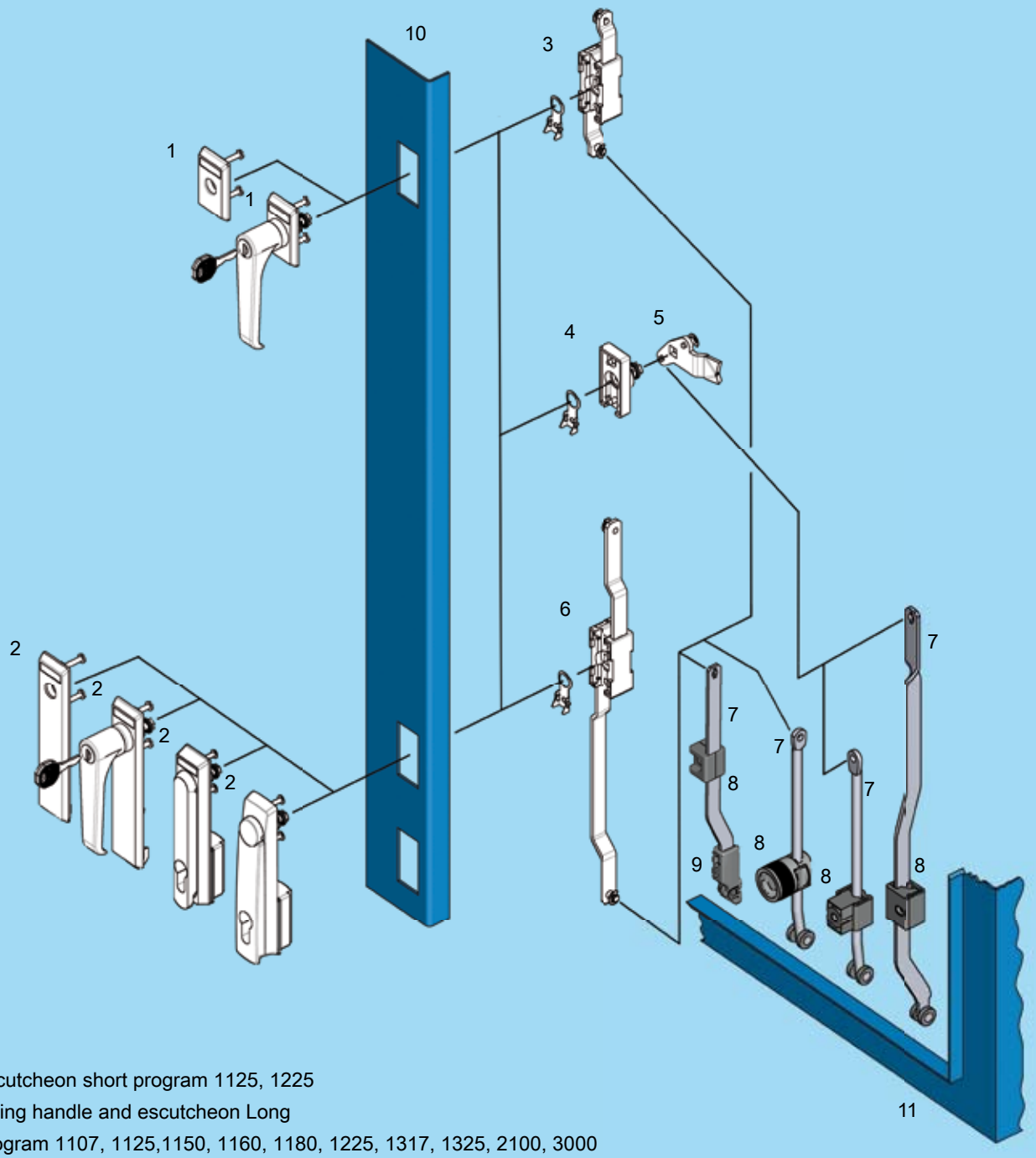

1 Escutcheon short program 1125, 1225
2 Swing handle and escutcheon Long
Program 1107, 1125,1150, 1160, 1180, 1225, 1317, 1325, 2100, 3000
3 Rod control
4 Bearing bush
5 Cam
6 Rod control
7 Rod (inside the gasketing)
8 Rod guide
9 Roller shoe
10 Door
11 Cabinet/frame

Rods

PROGRAM 1107, 1125, 1150, 1180, 1225, 1317, 1325, 2100, 3000

Application:
Program 1125, 1150, 1225, 1325, 3000
– Rod control 3YA-140
(Version B) 3YA-160
3YA-180
3YA-240

Program 1107, 1125, 1180, 1225, 1317, 1325, 2100, 3000
– Cam 3YB-420
3YB-440
3YC-120

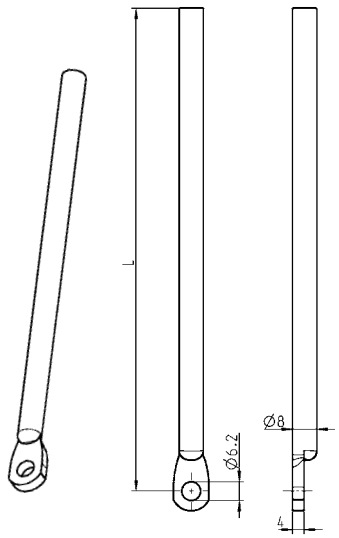

Application:
Program 1125, 1150, 1225, 1325, 3000
– Rod control 3YA-140
(Version B) 3YA-160
3YA-180
3YA-240

Program 1107, 1125, 1180, 1225, 1317, 1325, 2100, 3000
– Cam 3YB-420
3YB-440
3YC-120

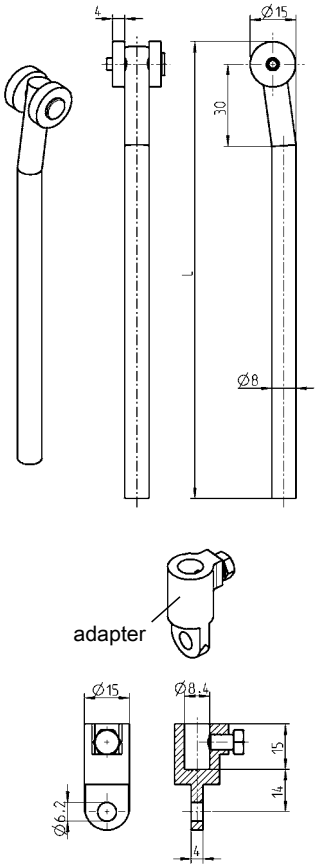

Application:
Program 1125, 1150, 1225, 1325, 3000
– Rod control 3YA-140
(Version B) 3YA-160
3YA-180
3YA-240

Program 1107, 1125, 1180, 1225, 1317, 1325, 2100, 3000
– Cam 3YB-420
3YB-440
3YC-120

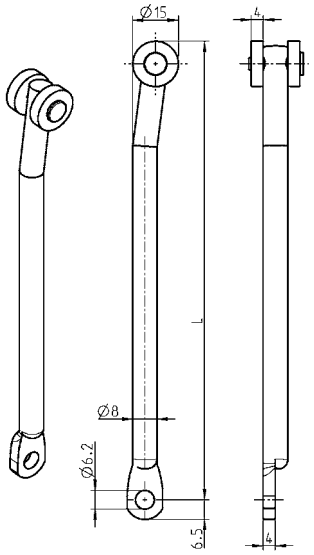

Application:
Program 1125, 1150, 1225, 1325, 3000
– Rod control 3YA-140
(Version B) 3YA-160
3YA-180
3YA-240

Program 1107, 1125, 1180, 1225, 1317, 1325, 2100, 3000
– Cam 3YB-420
3YB-440
3YC-120

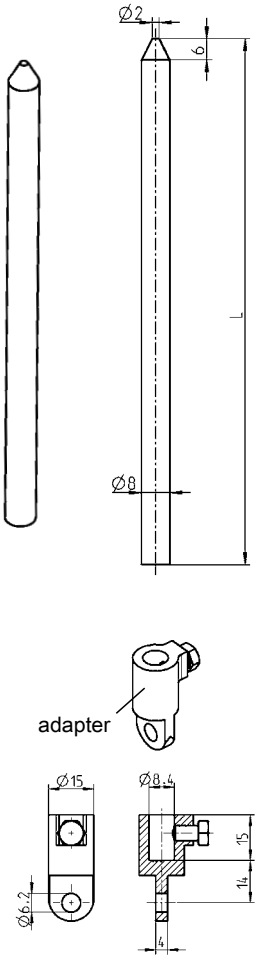

Round rod with eye m.s. zinc pl.	
L in mm	
400	1000-33
500	1000-34
600	1000-35
700	1000-36
800	1000-37
900	1000-38
1000	1000-39
1100	1000-114
1200	1000-115

Round rod m.s. zinc plated or AISI 304 with roller polyamide black		
L in mm	m.s. zinc pl.	AISI 304
600	1049-U3	1049-U12
700	1049-U4	1049-U13
800	1049-U5	1049-U14
900	1049-U6	1049-U15
1000	1049-U7	1049-U16
1100	1049-U8	1049-U17
1200	1049-U9	–
adapter	zinc die, m.s. zinc plated	AISI 303
	1000-U49	1000-U141

Round rod with eye, material on choice, rollers polyamide black
m.s. zinc plated for rod control
1121-U30-L mm
(1121-U30-01 to -08 see price list)
m.s. zinc plated for cam (Eye turned by 90°)
1000-U144-L mm
(1000-U144-01 to -17 see price list)
AISI 304 for cam (Eye turned by 90°)
1000-U538-L mm
(1000-U538-01 to -09 see price list)

Round rod with pointed end, m.s. zinc plated	
1049-19-L mm	
(1049-19-01 to -17 see price list)	
Adapter zinc die m.s. zinc plated	
	1000-U49

© EMKA Beschlagteile GmbH & Co. KG • 2016 • www.emka.com

EDELSTAHL Rost frei STAINLESS STEEL

Minimum order quantity: 200 pieces
Lower quantities on request!

L ≤ 1200

Order example: Article number for a rod with rollers and a length of 1034 mm = 1049-U18-L 1034

Application:
Program 1125, 1150, 1225, 1325, 3000
– Rod control 3YA-140
(Version B) 3YA-160
3YA-180
3YA-240

Program 1107, 1125, 1180, 1225, 1317, 1325, 2100, 3000
– Cam 3YB-420
3YB-440
3YC-120

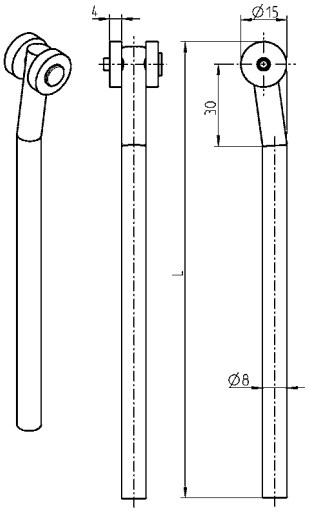

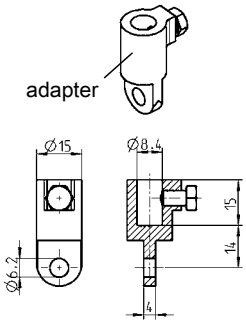

Use:
Program 1125, 1150, 1225, 1325, 3000
– Rod control 3YA-140
(Version B) 3YA-160
3YA-180
3YA-240

Program 1107, 1125, 1180, 1225, 1317, 1325, 2100, 3000
– Cam 3YB-420
3YB-440
3YC-120

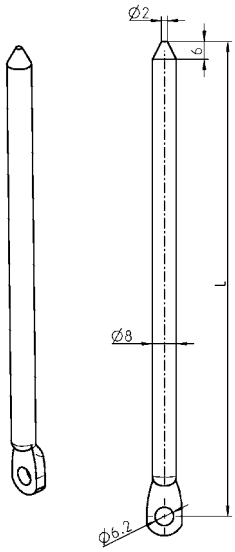

Application:
Program 1125, 1150, 1160, 1180, 1225, 1325, 2100, 3000
– Rod control 3D-120
3D-140
3E-120
3E-140
3YA-110
3YA-115
3YA-120
3YA-160
3YA-180
3YA-220
3YA-420
3YA-480
3YA-520
3YA-540

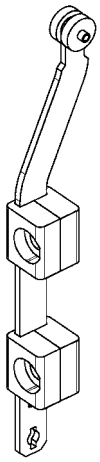

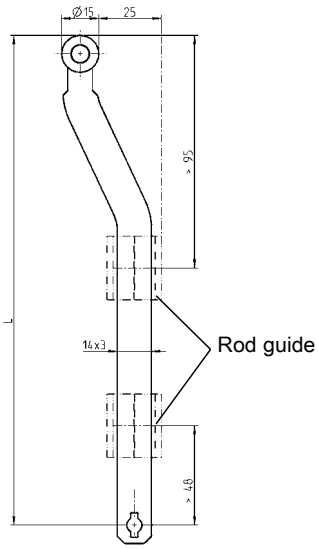

Round rod m.s.zinc plated, with rollers polyamide black
1049-U18-L mm
(1049-U18-01 to -17 see price list)
Adapter zinc die zinc pl.
1000-U49

Round rod with eye and pointed end, m.s. zinc plated
1000-211-L mm
(1000-211-01 to -17 see price list)

Flat rod m.s. zinc pl. with rollers polyamide black
1121-U28-L mm
(1121-U28-01 to -08 see price list)
Flat rod without hole L = 1007.5
1121-U148

Further parts see page
Rod guide
for flat rod 3ZC-120
up to 3ZC-170
for round rod 3ZC-210
3ZC-220

EMKA®

Beschlagteile

Connection rod with shoe

PROGRAM 1107 - 3000

RL

INOX AISI 3..

EDELSTAHL Rost frei STAINLESS STEEL

Minimum quantity: 200 pieces
Smaller quantities on request!

L ≤ 1200

Order sample:
PO no. of the connection rod m.s. zinc plated for shoe with a length of 1034 mm = 1000-XXX-L 1034

Calculation of rod length L

$$L = \frac{X - Z}{2} + Y$$

Application: program 1107, 1125, 1150, 1180, 1225, 1317, 1325, 2100, 3000

- rod control	3YA-140; 3YA-160; 3YA-180; 3YA-240
- cams	3YB-420; 3YB-440; 3YB-460; 3YC-120; 3YC-140; 3YC-180

* Dimension Y depending on type of gasketing

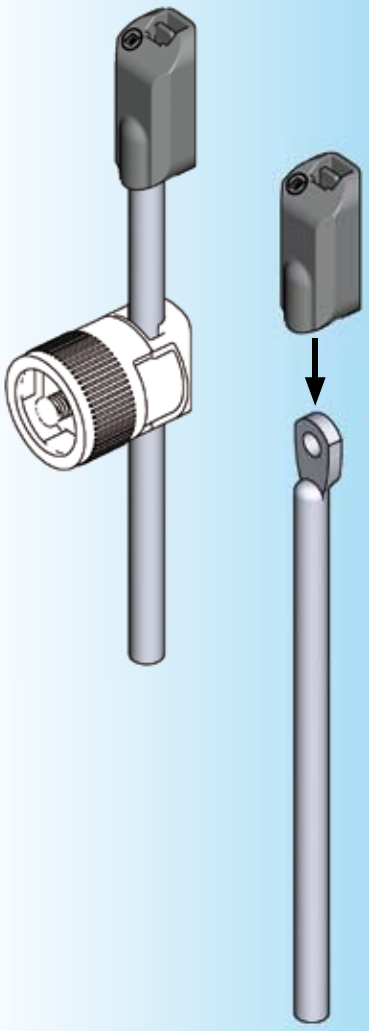

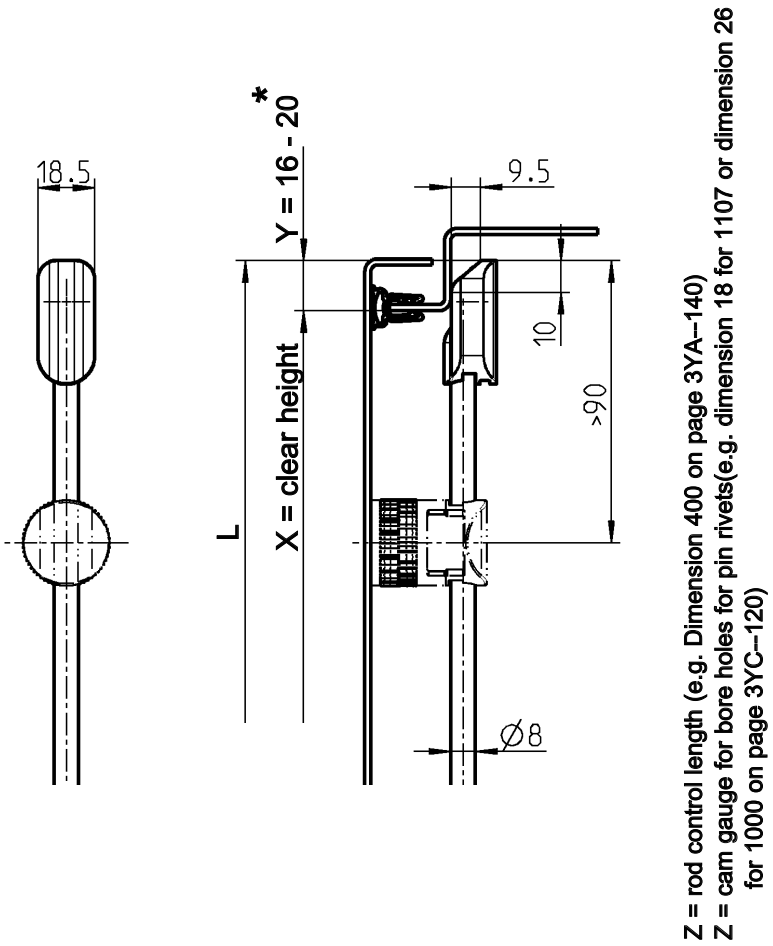

Please indicate dimension L in the order

Round rod connection to rod control or cam and material as requested		
	m.s. zinc plated	AISI 304
	on request	on request
Shoe Polyamide GF black		
		1000-526-AA

Further parts see page
– Rod guide 3ZC-210
3ZC-220

© EMKA Beschlagteile GmbH & Co. KG • 2016 • www.emka.com

Connection rod with shoe

PROGRAM 1125 - 3000

Minimum quantity: 200 pcs.
Smaller quantities on request!

EDELSTAHL Rost frei STAINLESS STEEL

L ≤ 1200
Order sample:
PO no. of connection rod m.s. zinc plated with shoe complete at a length of 1034 mm = 1121-U187-L 1034

Calculation of rod length L

$$L = \frac{X - Z}{2} + Y$$

Application: program 1125, 1150, 1160, 1180, 1225, 1325, 2100, 3000
- rod control 3D-120; 3D-140; 3E-140; 3J-120; 3YA-110, 3YA-115, 3YA-120; 3YA-160, 3YA-180; 3YA-220; 3YA-420; 3YA-480, 3YA-520; 3YA-540

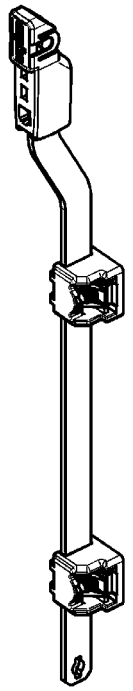

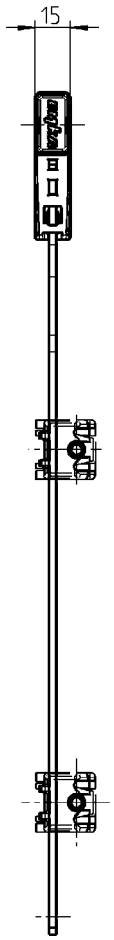

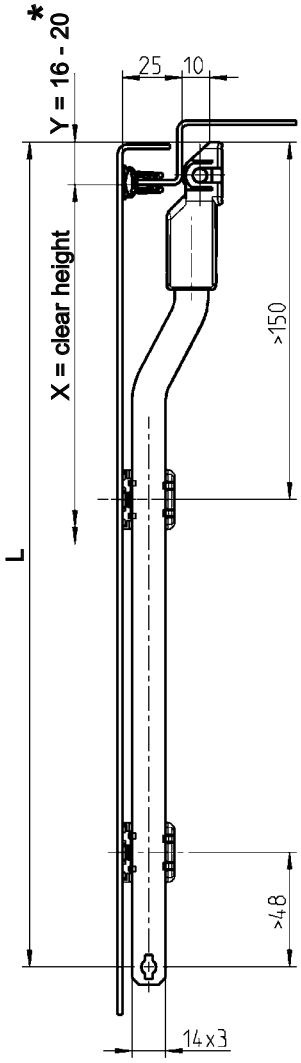

Z = rod control length (e.g. Dimension 347 on page 3YA–120)

Indicate dimension L when ordering

* Dimension Y depending on type of gasketing

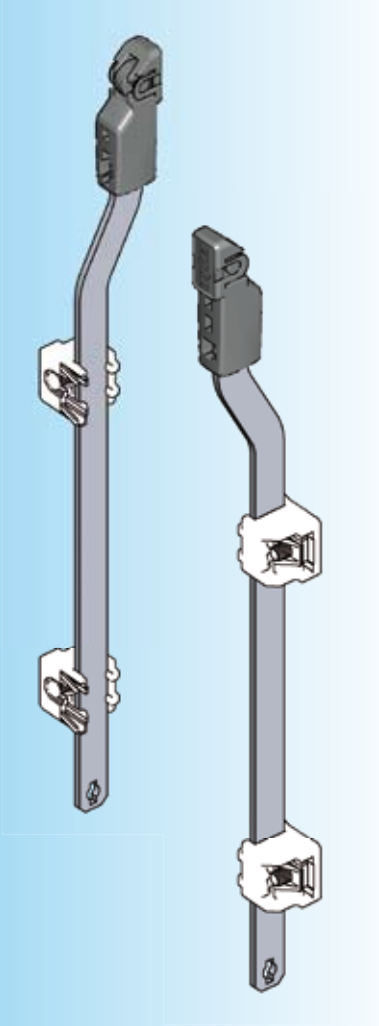

Connection rod with shoe pre-assembled		
	m.s. zinc plated	AISI 304
	1121-U187-L mm	on request
	(1121-U187-01 to -08 see price list	
Connection rod without bore holes with shoe pre-assembled flat rod without bore holes material as requested, shoe polyamide GF black, roller polyamide black		
	m.s. zinc plated	AISI 304
L + 7.5 = 1007.5	1121-U189	on request

Further parts see page
– Rod guide 3ZC-120 to 3ZC-170

© EMKA Beschlagteile GmbH & Co. KG • 2016 • www.emka.com

EMKA®

Beschlagteile

Shoe for flat rod

PROGRAM 1125 - 3000

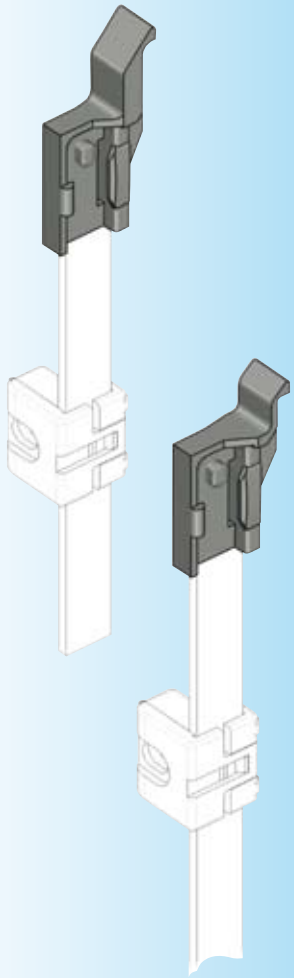

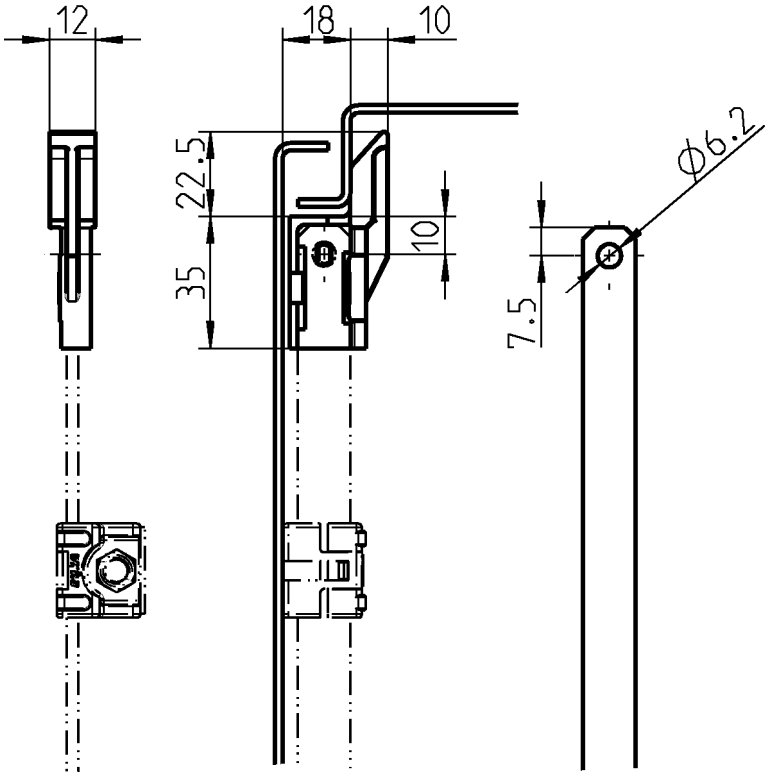

Shoe polyamide black	
long version	1121-112

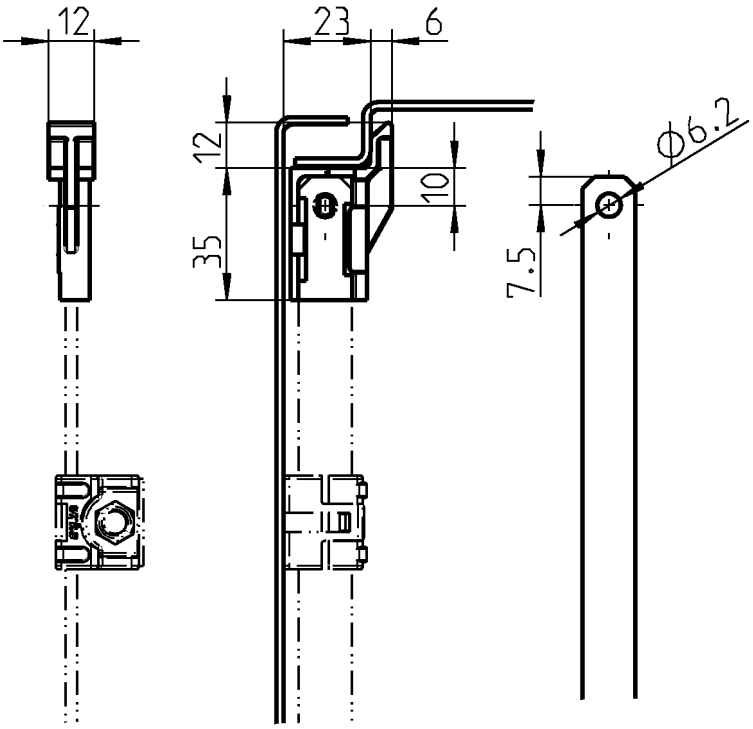

Shoe polyamide black	
short version	1121-113

Further parts see page

– Rod guide for flat rods 3ZC-120 up to 3ZC-170

– Rod on request

Program 1125, 1150, 1160, 1180, 1225, 1325, 2100, 3000

– Rod control
3D-120
3D-140
3E-120
3E-140
3YA-110
3YA-115
3YA-120
3YA-160
3YA-180
3YA-220
3YA-420
3YA-480
3YA-520
3YA-540

© EMKA Beschlagteile GmbH & Co. KG • 2016 • www.emka.com

Rod for cam stroke 26 mm

PROGRAM 1107, 1317

Minimum order quantity: 200 pieces
Lower quantities on request

How to find dim. L		Swinghandle long	Swinghandle short
Upper rod	$L = \frac{X}{2}$	– 63	- 50,5
Lower rod	$L = \frac{X}{2}$	+ 67	+ 54,5
Centre of rotation on door centre, upper and lower rods are the same length	$L = \frac{X}{2} + 2$		

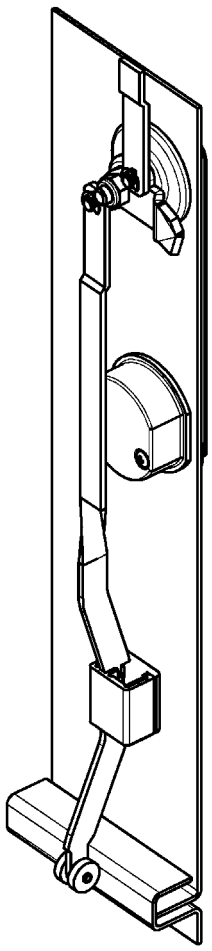

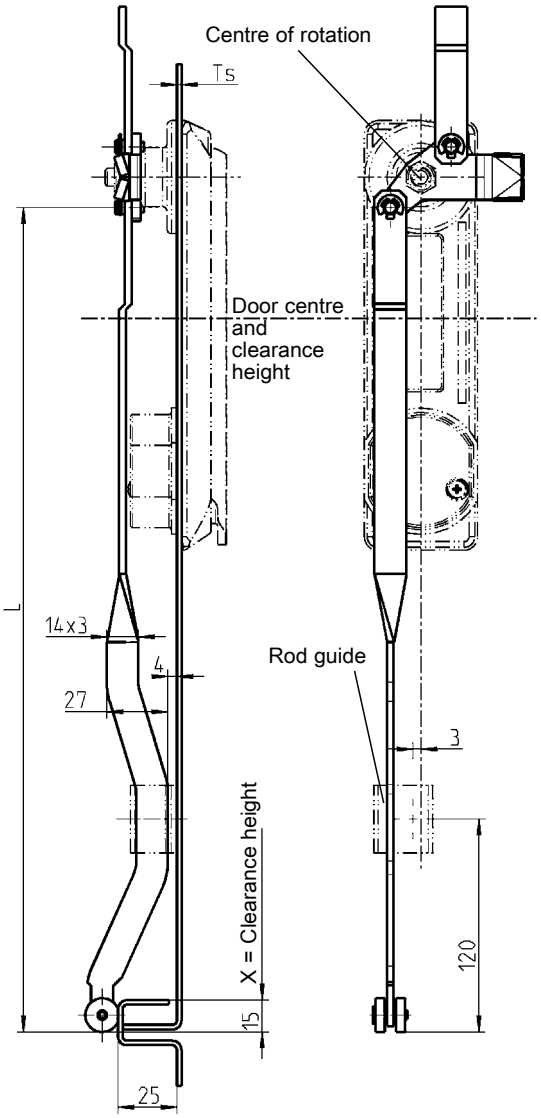

Ts = 2
other door gauges on request

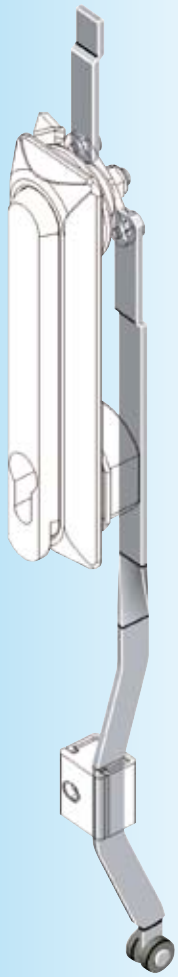

Note:
Swinghandle with cut-out
Hole distance
130 mm = long
105 mm = short

Further parts see page
– Rod guide 3ZC-120
up to 3ZC-170

Program 1107, 1317
– Cam with stroke 26 3YC-120

Flat rod m.s. zinc pl. with rollers polyamide black	
	1121-U144-L mm
	(1121-U144-01 to -08 see price list)

© EMKA Beschlagteile GmbH & Co. KG • 2016 • www.emka.com

EMKA®

Beschlagteile

Connection rod for cam with stroke 26 mm

PROGRAM 1125, 1225, 1325, 3000

RL

Minimum quantity: 200 pcs.
Smaller quantities on request

Calculation of rod length L

Connection rod top	L=	$\frac{X}{2}$	– 48
Connection rod bottom	L=	$\frac{X}{2}$	+ 52
Centre of rotation door centre top and bottom same rod length	L=	$\frac{X}{2}$	+2

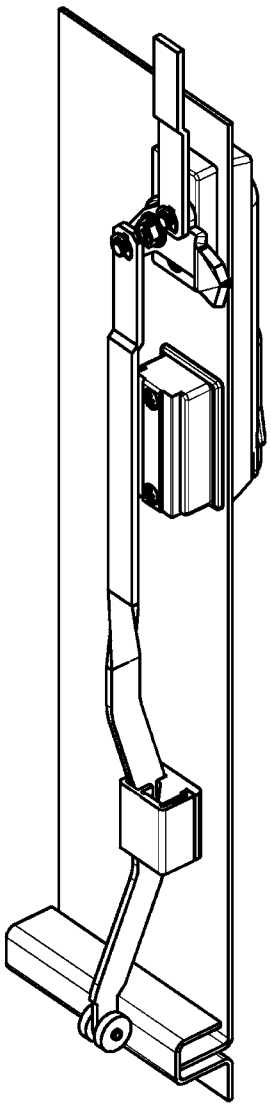

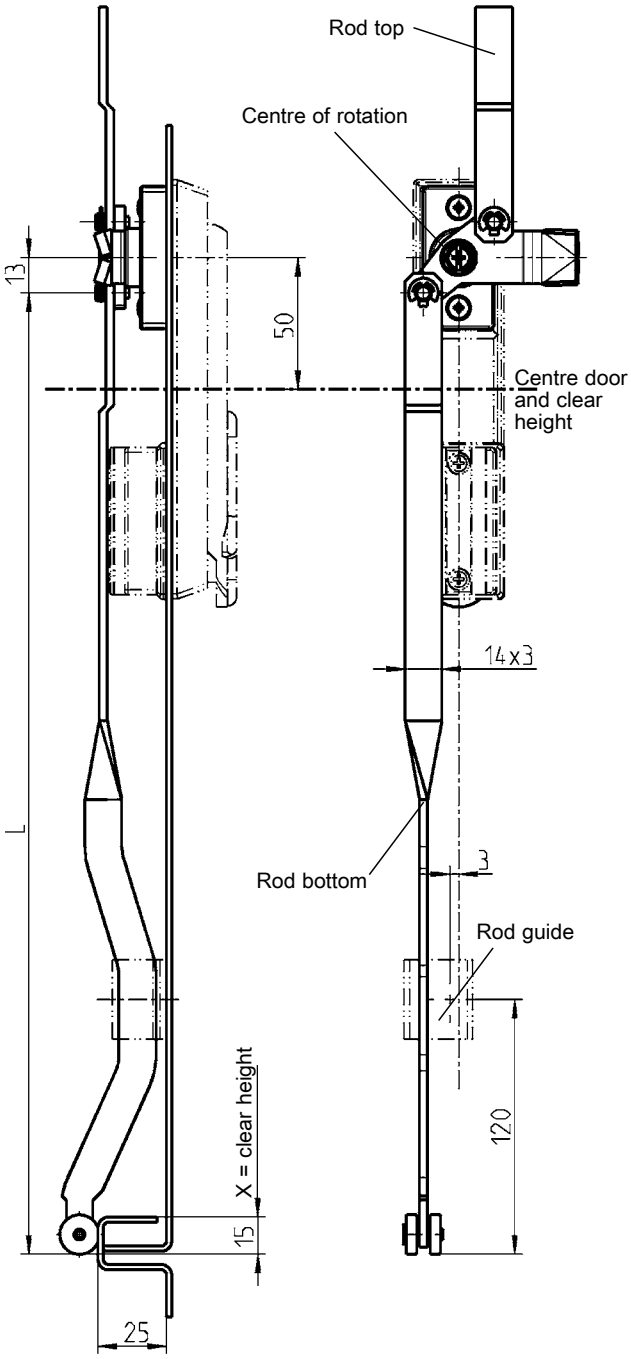

Ts = 2
other door thicknesses on request

Further parts see page
– Rod guide 3ZC-120 to 3ZC-170

Program 1125, 1225, 1325, 3000
– Cam with stroke 26 3YB-420

Flat rod m.s. zinc plated ramp rollers polyamide black	
	1121-U144-L mm
	(1121-U144-01 bis -08 see price list)

© EMKA Beschlagteile GmbH & Co. KG • 2016 • www.emka.com

Connection rod for cam with stroke 26 mm

PROGRAM 1125

R L

Minimum quantity: 200 pcs.
Smaller quantities on request

Calculation of rod length L

Connection rod top	L=	$\frac{X}{2}$	– 70,5
Connection rod bottom	L=	$\frac{X}{2}$	+ 74.5
Centre of rotation door centre top and bottom same rod length	L=	$\frac{X}{2}$	+ 2

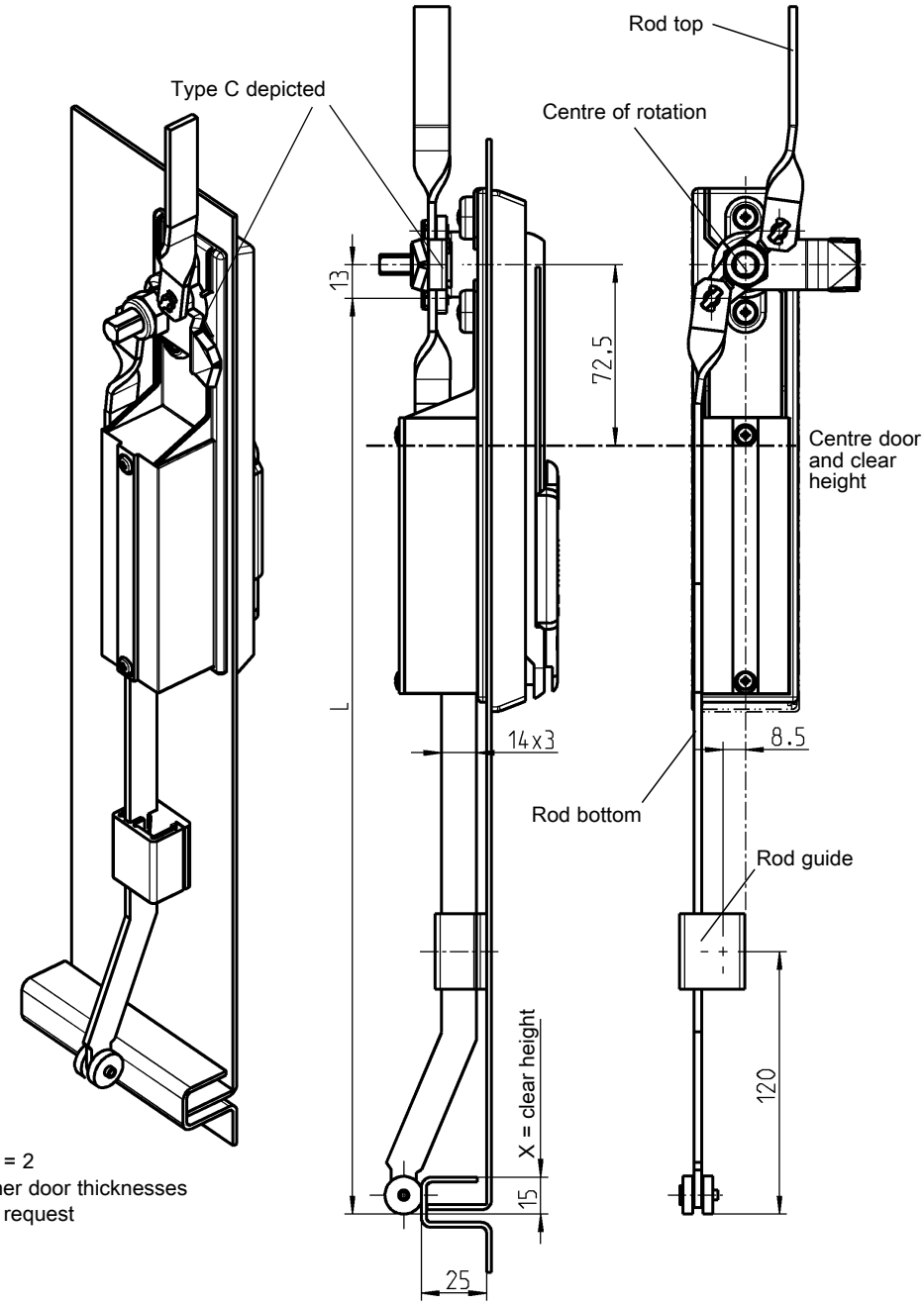

Ts = 2
other door thicknesses on request

Further parts see page
– Rod guide 3ZC-120 to 3ZC-170

Program 1125
– Cam with stroke 26 3YC-120 3YC-140

Flat rod m.s. zinc plated, ramp rollers polyamide black		
left	1121-U146-L mm	(1121-U146-01 to -08)
right (depicted)	1121-U147-L mm	(1121-U147-01 bis -08)
		see price list

© EMKA Beschlagteile GmbH & Co. KG • 2016 • www.emka.com

EMKA®

Beschlagteile

Connection rod for cam with stroke 26 mm

PROGRAM 1150

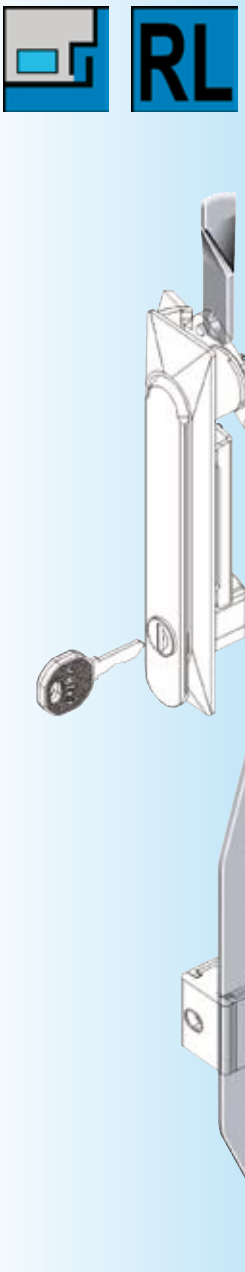

Minimum quantity: 200 pcs.
Smaller quantities on request

Calculation of rod length L:	Version	Swing handle see note A	Swing handle see note B
Connection rod top	$L = \frac{X}{2}$	– 28	- 48
Connection rod bottom	$L = \frac{X}{2}$	+ 32	+ 52
Centre of rotation door centre top and bottom same rod length	$L = \frac{X}{2} + 2$		

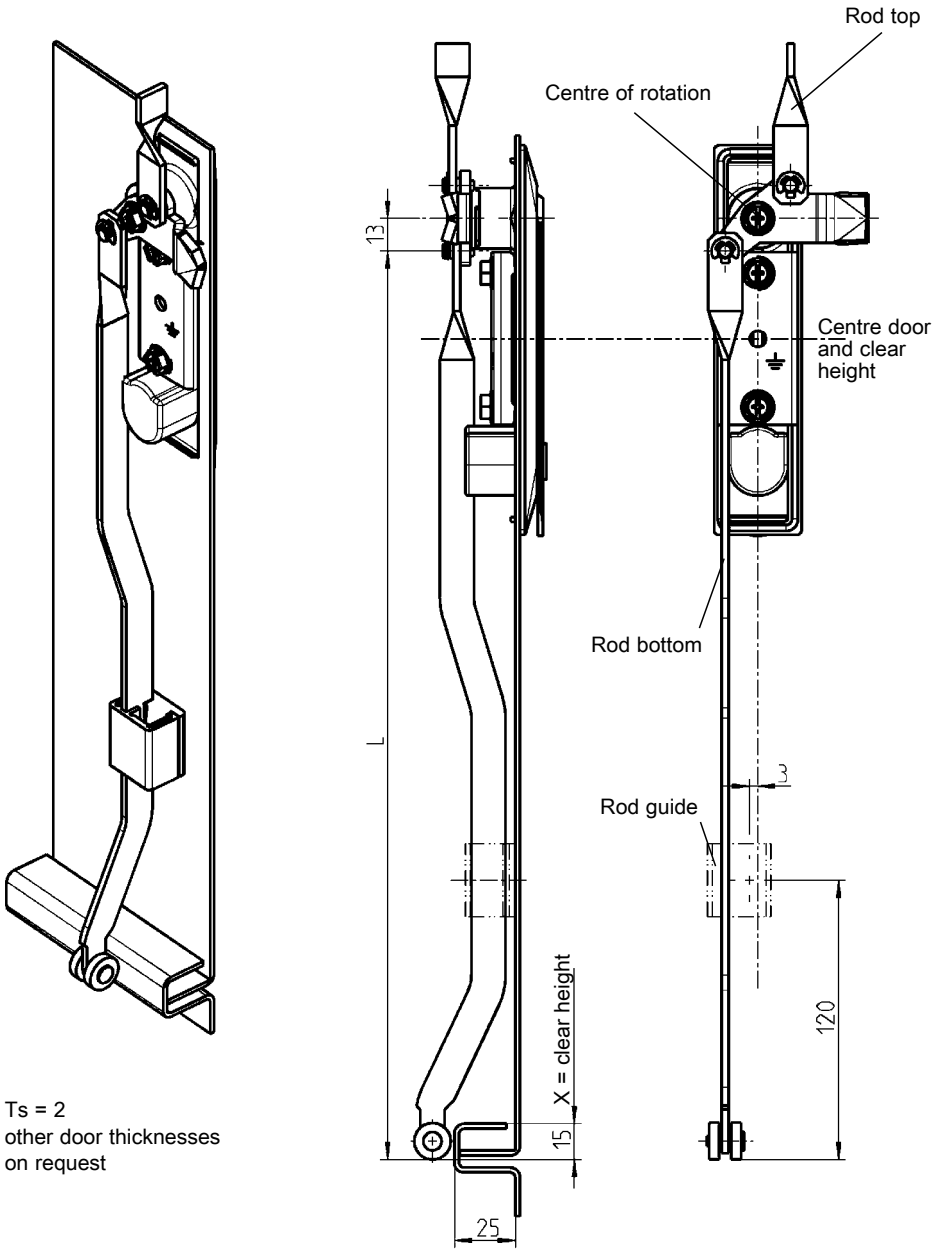

Ts = 2
other door thicknesses on request

Note:
Calculation of connection rod version A or B suitable for
– Swing handle 1150 3C-120 = A
3C-120 = B
– Swing handle 1150 3C-140 = B
– Swing handle 1155 3C-620 = B

Further parts see page
– Rod control 3ZC-120 to 3ZC-170

Program 1150
– Cam with stroke 26 3YC-120 3YC-140

Flat rod m.s. zinc plated, ramp rollers polyamide black	
	1121-U145-L mm
	(1121-U145-01 to -08 see price list)

© EMKA Beschlagteile GmbH & Co. KG • 2016 • www.emka.com

Connection rod for cam with stroke 26 mm

PROGRAM 1150

R L

Minimum quantity: 200 pcs.
Smaller quantities on request

Calculation of rod length L:	Version	Swing handle see note A	B	C
Connection rod top	$L = \frac{X}{2}$	– 48	– 54	– 70,5
Connection rod bottom	$L = \frac{X}{2}$	+ 52	+ 58	+74.5
Centre of Rotation door centre top and bottom same rod length	$L = \frac{X}{2} + 2$			

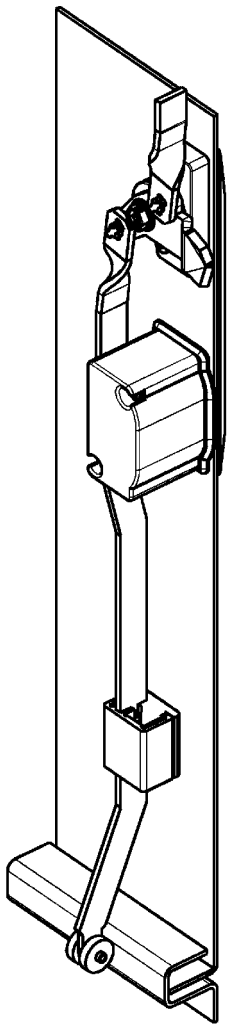

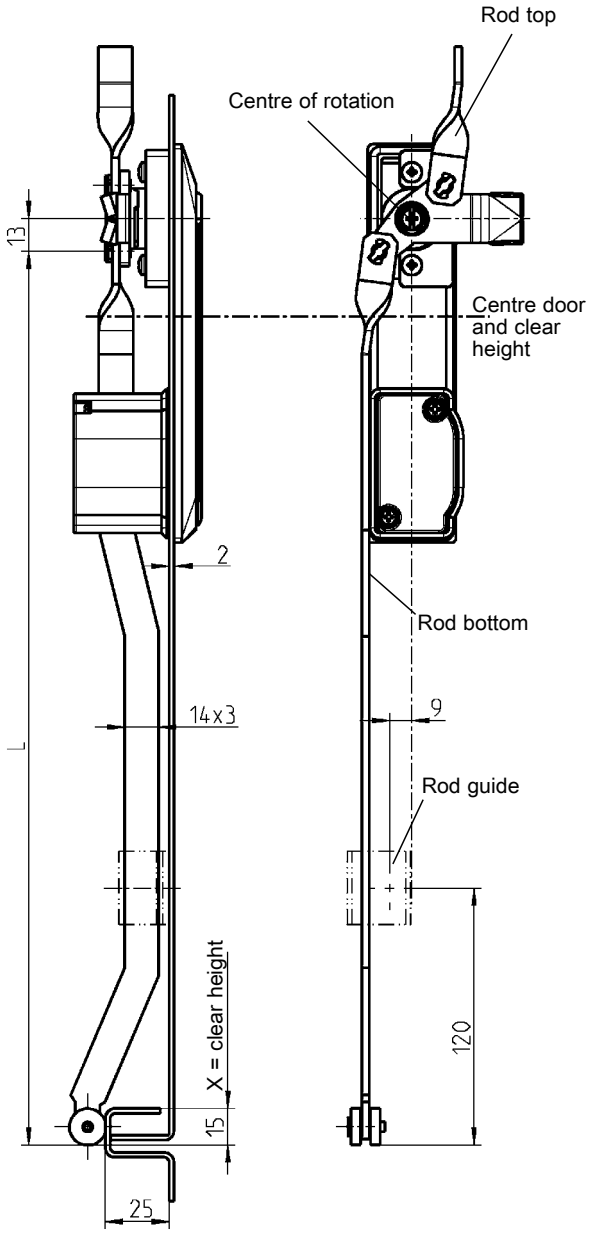

Ts = 2
other door thicknesses on request

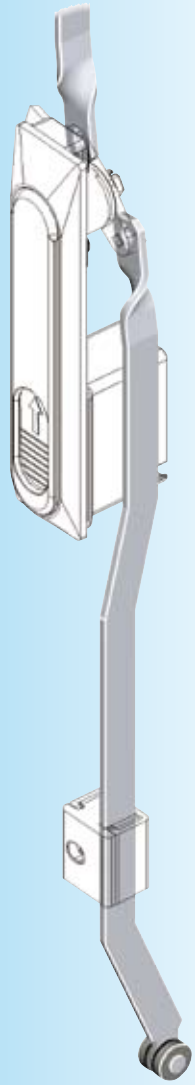

Note:
Calculation of the connection rod type A or B suitable for
– Swing handle 1154 3C-220 = A
– Swing handle 1153 3C-320 = A
– Swing handle 1154 3C-260 = B
– Swing handle 1154 3C-280 = C
– Swing handle 1151 3C-420 = C

Further parts see page
– Rod control 3ZC-120 to 3ZC-170

Program 1150
– Cam with stroke 26 3YC-120 3YC-140

Flat rod m.s. zinc plated, ramp rollers polyamide black		
left	1121-U146-L mm	(1121-U146-01 to -08)
right (depicted)	1121-U147-L mm	(1121-U147-01 to -08)
		see price list

© EMKA Beschlagteile GmbH & Co. KG • 2016 • www.emka.com

EMKA®

Beschlagteile

Connection rod for cam with stroke 26 mm

PROGRAM 1180

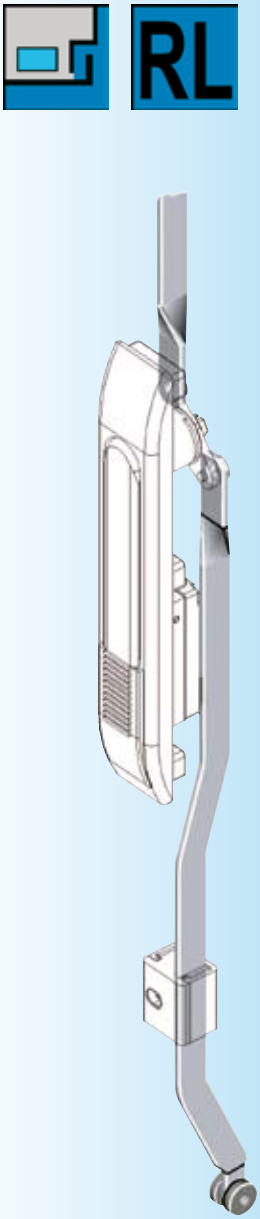

Minimum quantity: 200 pcs.
Smaller quantities on request

Calculation of rod length L:	Version	Swing handle see note A	Swing handle see note B
Connection rod top	$L = \frac{X}{2}$	– 55	– 70,5
Connection rod bottom	$L = \frac{X}{2}$	+ 59	+ 74.5
Centre of rotation door centre top and bottom same rod length	$L = \frac{X}{2} + 2$		

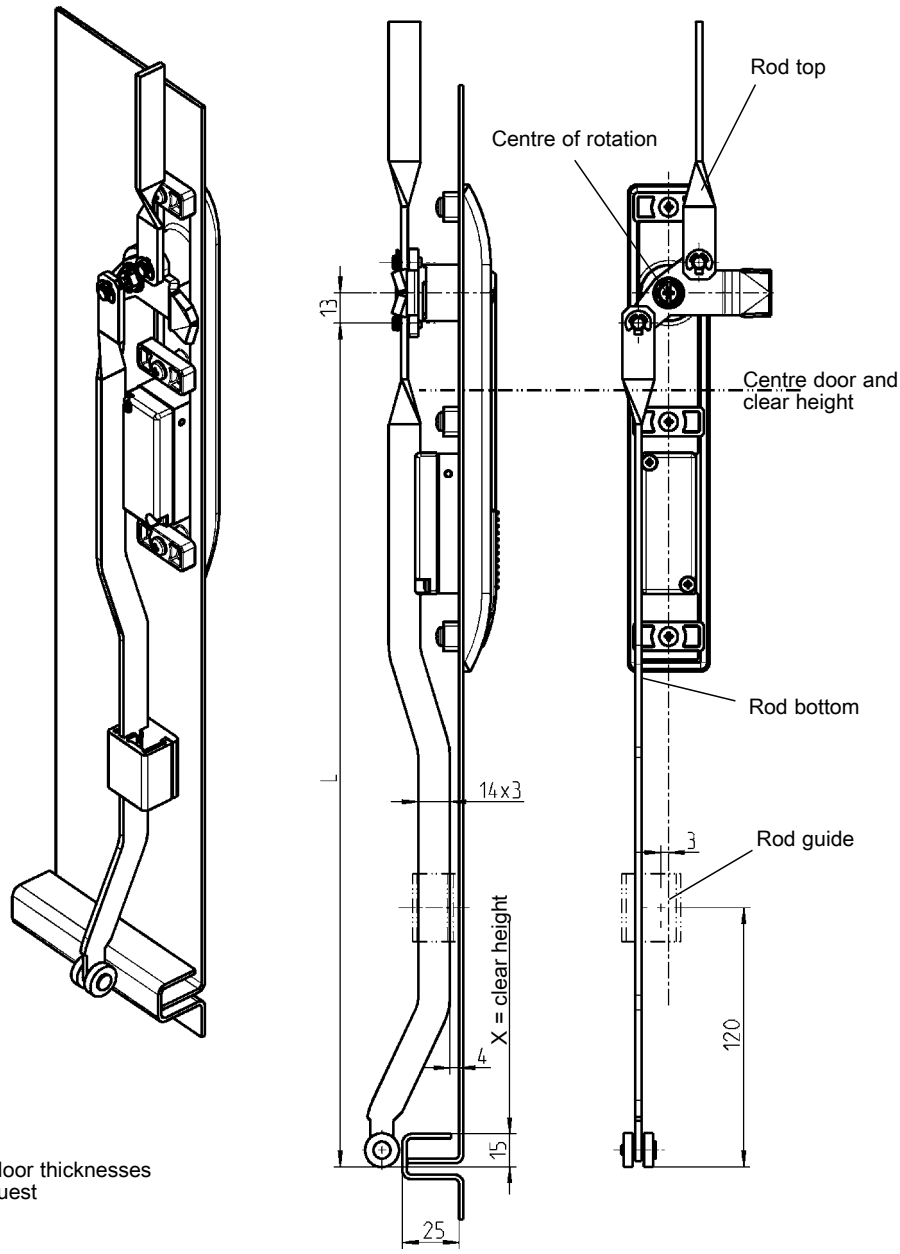

Ts = 2
other door thicknesses on request

Note:
Calculation of connection rod version A or B suitable for
– Swing handle 1180 3E-320 = A
– Swing handle 1185 3E-520 = B

Further parts see page
– Rod control 3ZC-120 to 3ZC-170

Program 1180
– Cam with stroke 26 3YC-120 3YC-140

Flat rod m.s. zinc plated, ramp rollers polyamide black	
	1121-U145-L mm
	(1121-U145-01 to -08 see price list)

© EMKA Beschlagteile GmbH & Co. KG • 2016 • www.emka.com

Connection rod for cam with stroke 26 mm

PROGRAM 1225

R L

Minimum quantity: 200 pcs.
Smaller quantities on request

Calculation of rod length L

Connection rod top	L=	$\frac{X}{2}$	– 80,5
Connection rod bottom	L=	$\frac{X}{2}$	+ 84.5
Centre of rotation door centre top and bottom same rod length	L=	$\frac{X}{2}$	+ 2

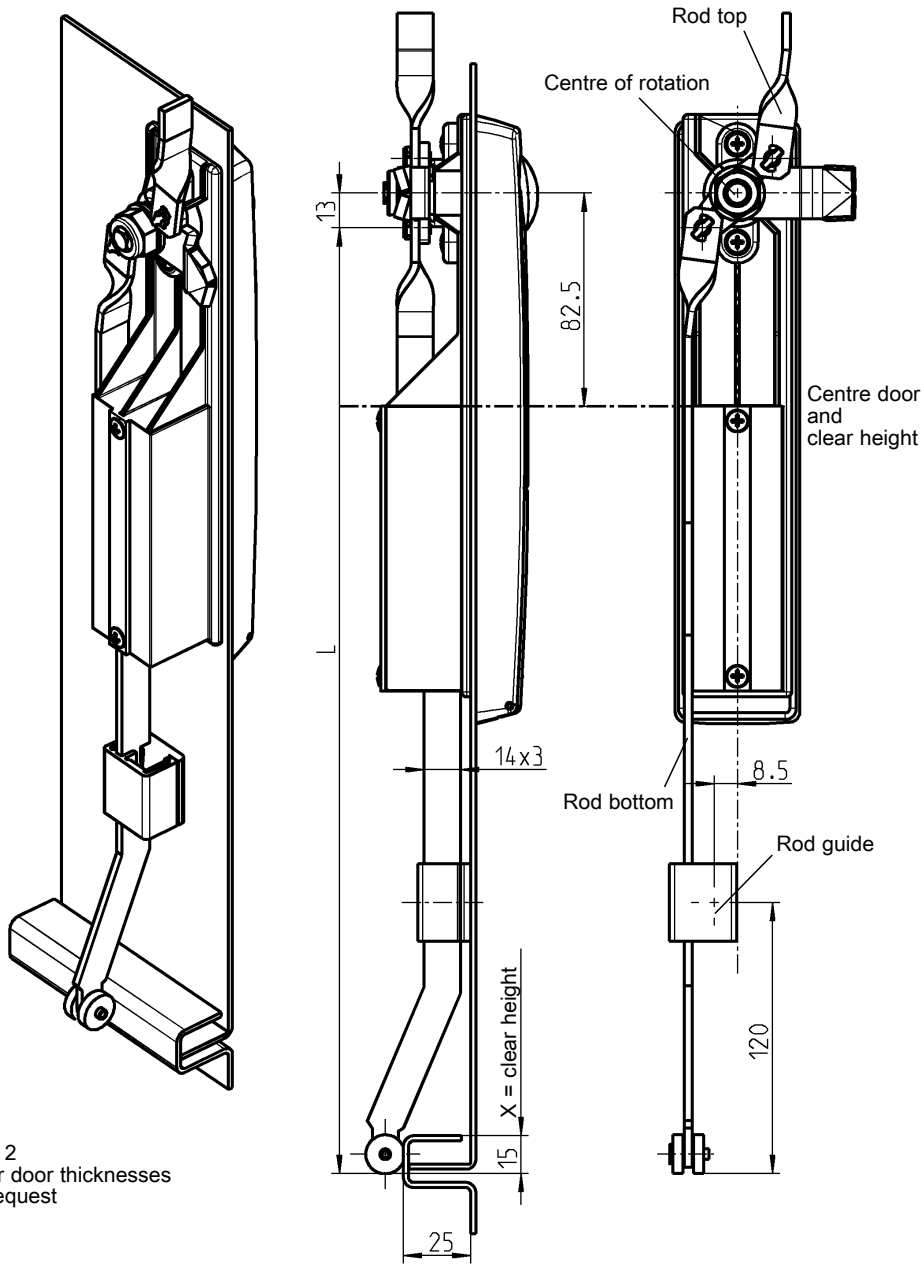

Ts = 2
other door thicknesses on request

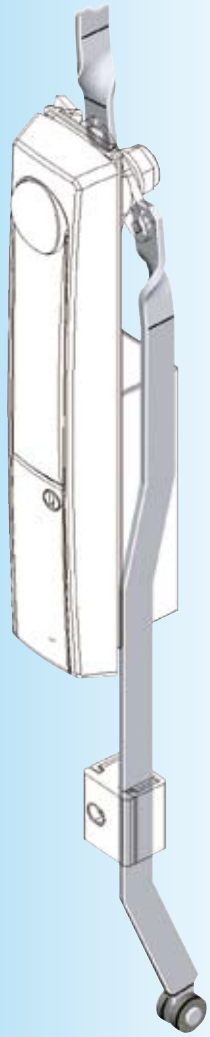

Flat rod m.s. zinc plated, ramp rollers polyamide black		
left	1121-U146-L mm	(1121-U146-01 to -08)
right (depicted)	1121-U147-L mm	(1121-U147-01 to -08)
		see price list

Further parts see page
– Rod control 3ZC-120 to 3ZC-170

Program 1225
– Cam with stroke 26 3YC-140

© EMKA Beschlagteile GmbH & Co. KG • 2016 • www.emka.com

EMKA®
Beschlagteile

Rods for cams with stroke 26 mm

PROGRAM 2100

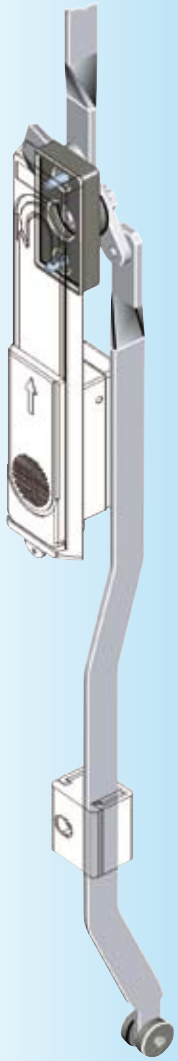

Minimum order quantity: 200 pieces
Lower quantities on request

How to find dim. L

Upper rod	L=	$\frac{X}{2}$	– 56
Lower rod	L=	$\frac{X}{2}$	+ 60
Centre of rotation on door centre, upper and lower rods are the same length	L=	$\frac{X}{2}$	+ 2

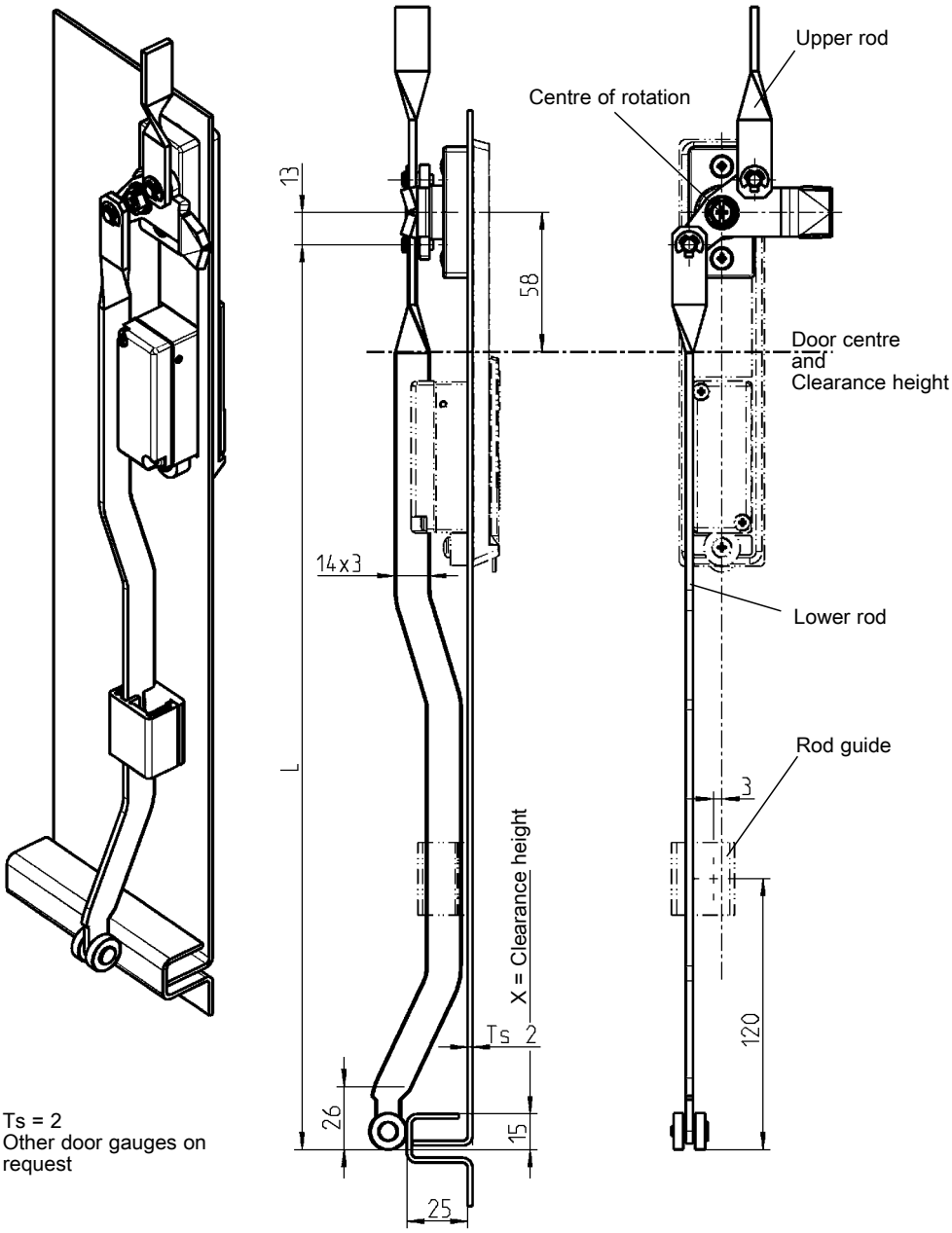

Ts = 2
Other door gauges on request

Further parts see page
– Rod guide 3ZC-120 up to 3ZC-170

Program 2100
– Cam with stroke 26 3YB-420

Flat rod m.s. zinc pl. with rollers polyamide black	
	1121-U145-L mm
	(1121-U145-01 to -08 see price list)

© EMKA Beschlagteile GmbH & Co. KG • 2016 • www.emka.com

Rod guide
Program 1107, 1125, 1150, 1160, 1180, 1190, 1225, 1317, 1325, 2100, 2400, 3000

1
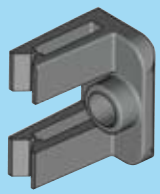

2
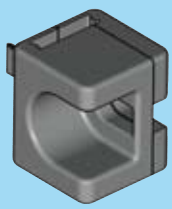

2

2

2
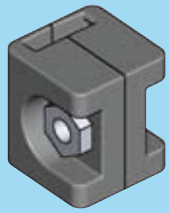

3

4
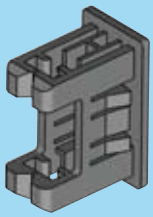

5

6
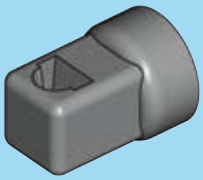

7
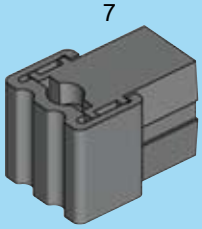

8
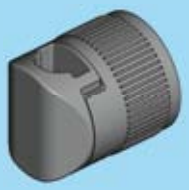

1 for flat rod 3 x 14, flat rod will clip in
2 for flat rod 3 x 14, rod guide can be pre-assembled on rod
3 for flat rod 3 x 14, rod guide stainless steel
4 for flat rod 3 x 14, rod guide and flat rod will clip in
5 for flat rod 3 x 14, rod guide clipped on and flat rod clipped in
6 for round rod Ø 8
7 for round rod Ø 8, bottom part of rod guide is pre-assembled
8 for round rod Ø 8, rod guide is slipped on and tightened

Rod guide for flat rod 3 x 14

PROGRAM 1107 - 3000

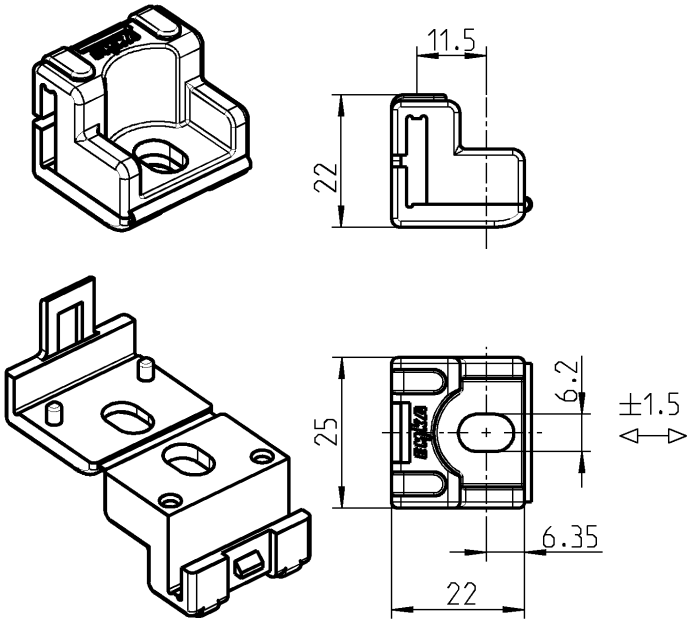

Rod guide can be pre-assembled on rod!

Rod guide polyamide black for weld stud M6x12	
	1121-109

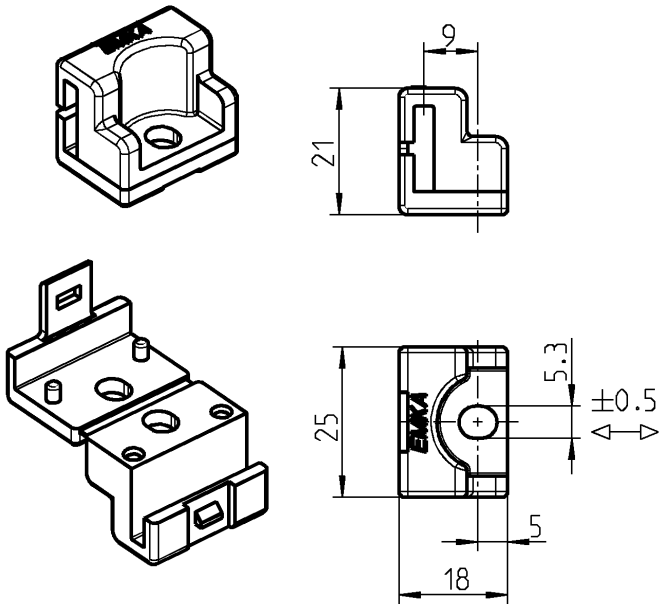

Rod guide can be pre-assembled on rod!

Rod guide polyamide black for weld stud M5x12	
	1121-106

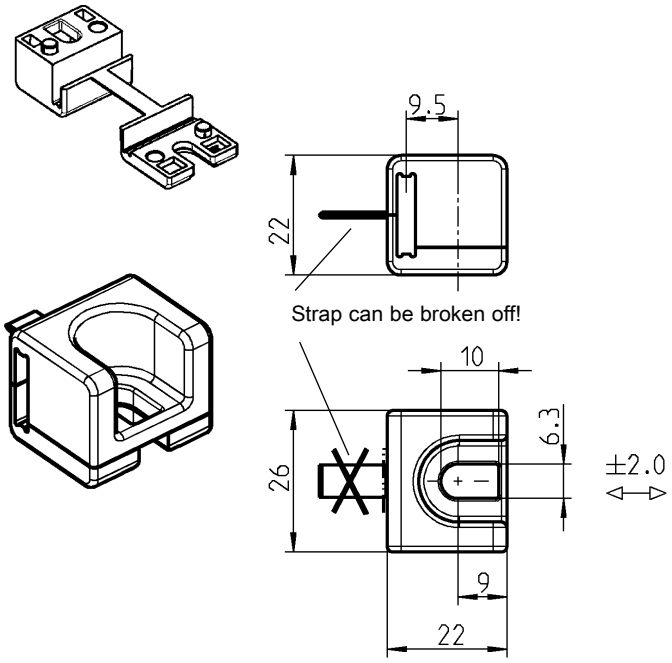

Rod guide can be pre-assembled on rod!

Rod guide polyamide black for weld stud M6x16 or M6x20	
	1121-19-N

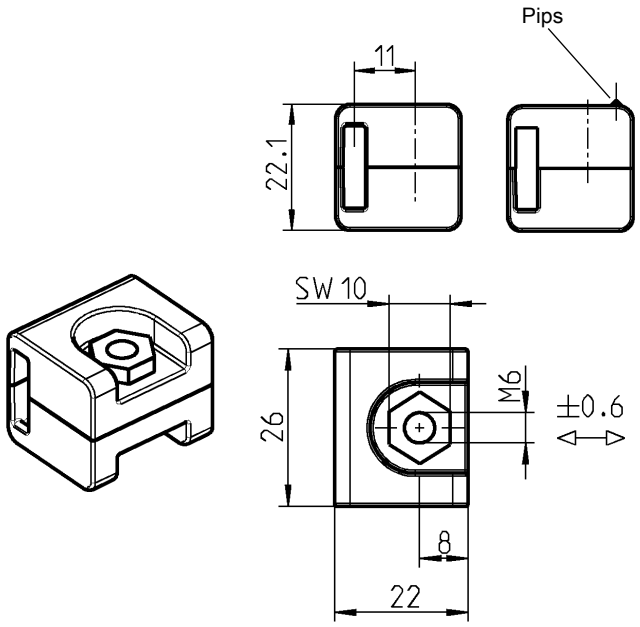

Pips avoid “door rattling”

Rod guide can be pre-assembled on rod!

Rod guide polyamide black, safety nut m.s. zinc plated for weld studs or countersunk screw M6x16 or M6x20	
without pips	1121-U71-N
with pips	1121-U74-N

© EMKA Beschlagteile GmbH & Co. KG • 2016 • www.emka.com

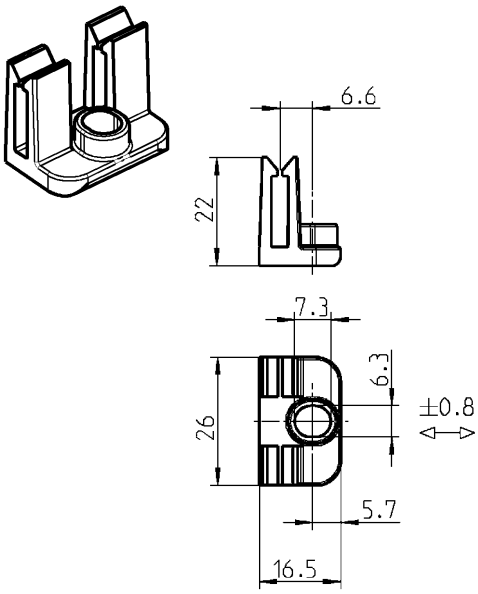

Flat rod will clip in!

For narrow bending area!

Rod guide polyamide black for rivet nut Ø 6x8-M4 and oval head screw DIN 7045 M4x6	
	1121-89-11

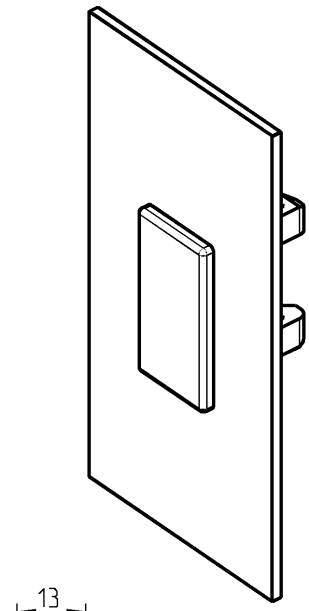

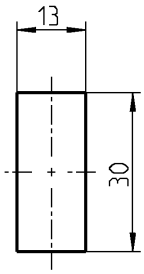

Cut out

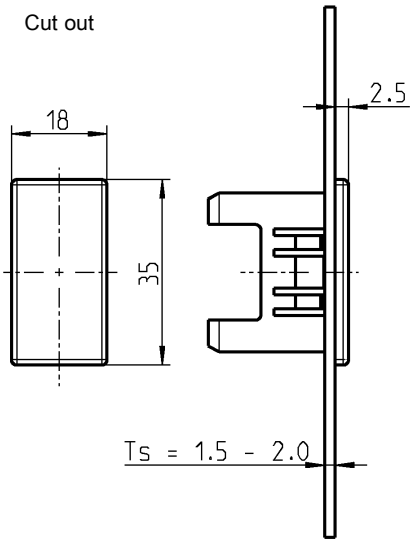

Flat rod will clip in!

EDELSTAHL Rost frei STAINLESS STEEL

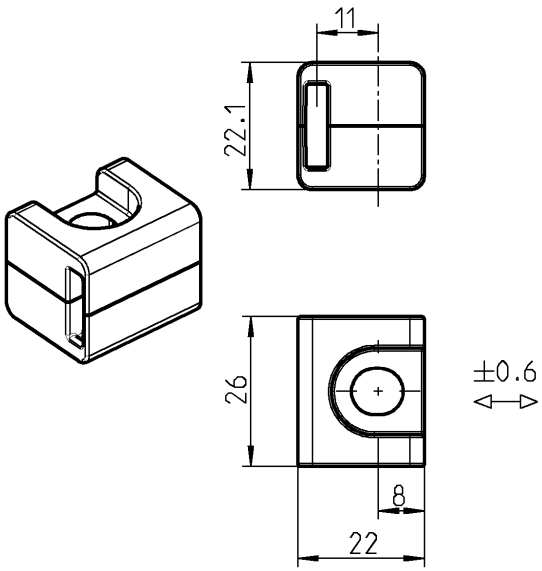

Rod guide AISI 316 for weld stud or countersunk screw M6x20	
	1121-U71-PH

Rod guide polyamide black	
	2300-04

Further parts see page

Program 1107; 1317
– Rods 3ZB-320

Program 1125; 1225; 1325
– Rods 3ZA-120
up to 3ZA-340
3ZB-120
up to 3ZB-220
3ZB-420
(only for 1125) 3ZB-440
(only for 1225) 3ZB-720

Program 1150
– Rods 3ZA-120
up to 3ZA-340
3ZB-120
up to 3ZB-220
3ZB-520
3ZB-540

Program 1160
– Rods 3ZA-120
up to 3ZA-420
3ZB-120
up to 3ZB-220

Program 1180
– Rods 3ZA-120
up to 3ZA-340
3ZA-520
3ZB-120
up to 3ZB-220
3ZB-620

Program 1190
– Rods 3ZA-120
to 3ZA-340

Program 2100
– Rods 3ZA-120
to 3ZA-340
3ZB-120
to 3ZB-220
3ZB-820

Program 2400
– Rods 3ZA-820

Program 3000
– Rods 3ZA-120
to 3ZA-340
3ZB-120
to 3ZB-220

© EMKA Beschlagteile GmbH & Co. KG • 2016 • www.emka.com

EMKA®

Beschlagteile

Notes:

Rod guide clip in for flat rod 3x14

PROGRAM 1107 - 3000

Stripping force: $F_{max.}$ = 650 N
Application force: Typical value F = very low

These values refer to threads with fat-free surface.

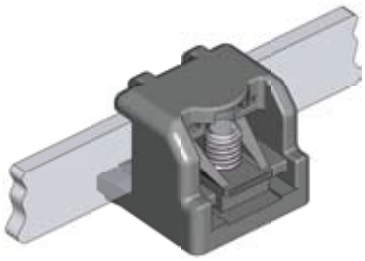

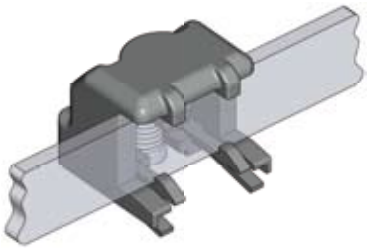

Flat rod and weld stud depicted transparent

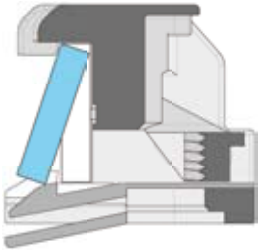

1.
Assembly of flat rod into the rod guide

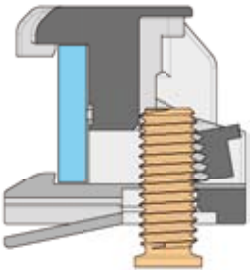

2.
Assembly of rod guide of weld stud

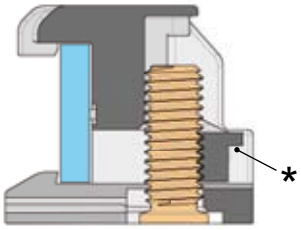

3.
Rod guide fully assembled

*
Strap has to be lifted for disassembly

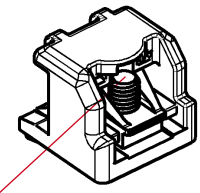

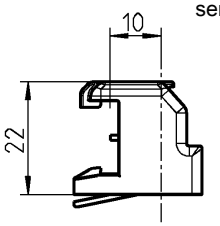

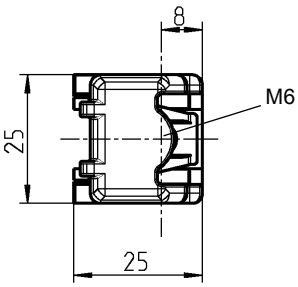

ADVANTAGE
The rod guide can also be clipped in in case of powder coated weld studs and still provides a high stripping force!

Further parts see page

Programm 1107; 1317
– Connection rods 3ZB-320

Program 1125; 1225; 1325
– Connection rods 3ZA-120 to 3ZA-340
3ZB-120 to 3ZB-220
3ZB-420
(only for 1125) 3ZB-440
(only for 1225) 3ZB-720

Program 1150
– Connection rods 3ZA-120 to 3ZA-340
3ZB-120 to 3ZB-220
3ZB-520
3ZB-540

Program 1160
– Connection rods 3ZA-120 to 3ZA-420
3ZB-120 to 3ZB-220

Program 1180
– Connection rods 3ZA-120 to 3ZA-340
3ZA-520
3ZB-120 to 3ZB-220
3ZB-620

Program 1190
– Connection rods 3ZA-120 to 3ZA-340

Program 2100
– Connection rods 3ZA-120 to 3ZA-340
3ZB-120 to 3ZB-220
3ZB-820

Program 2400
– Connection rods 3ZA-820

Program 3000
– Connection rods 3ZA-120 to 3ZA-340
3ZB-120 to 3ZB-220

Rod guide clip-in type polyamide black for weld stud M6x16 or M6x20

1121-135

© EMKA Beschlagteile GmbH & Co. KG • 2016 • www.emka.com

EMKA Beschlagteile

® Rod guide quick assembly for round rods 8 mm

PROGRAM 1107 - 3000

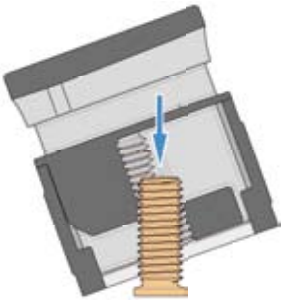

1.
Place the rod guide on weld stud.
(Hereby the time-consuming screwing is reduced considerbly.)

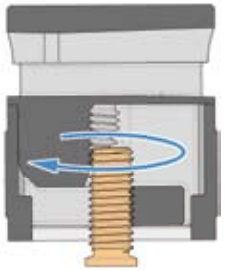

2.
Set the rod guide upright. This makes it snap in place noticeably and audibly; and it can then be secured by only a few rotations.

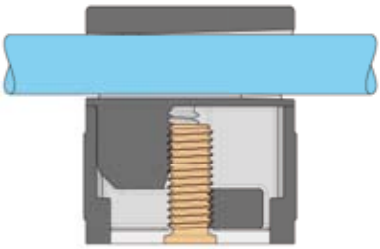

3.
Rod guide is completely mounted.

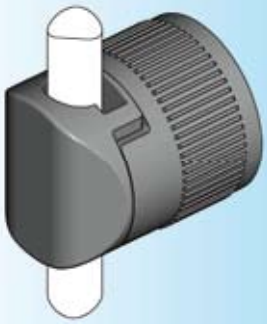

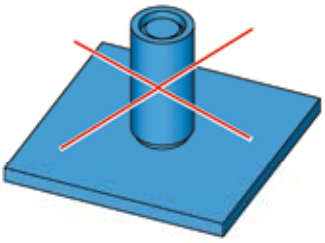

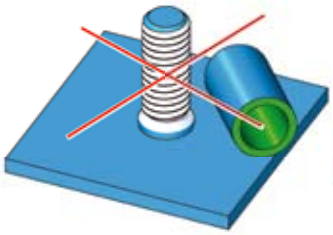

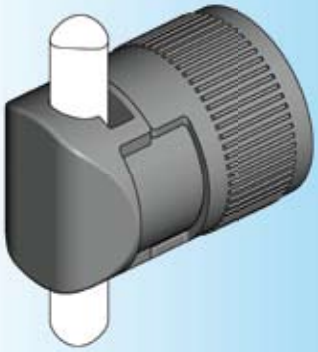

ADVANTAGE
This rod guide is suitable for raw and powder coated weld studs.
The covering of the weld stud before powdering can be omitted, this results in process optimization and cost saving.

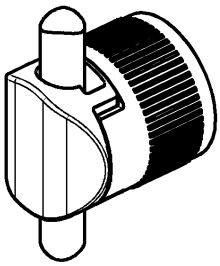

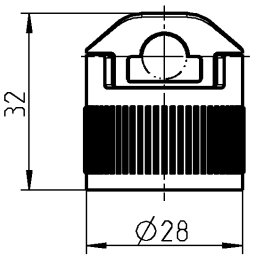

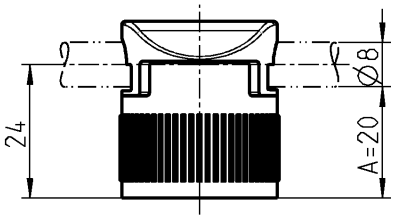

Note:
Rod guide suitable for dimensions
of A=20 and A=26

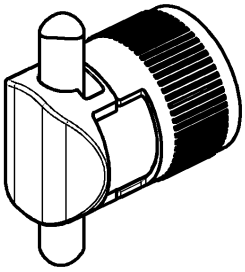

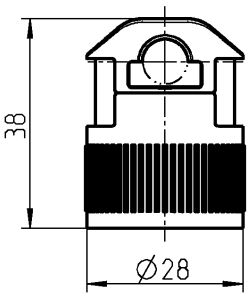

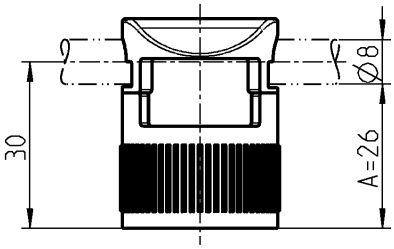

Further parts see page

Program 1107, 1125, 1150, 1180, 1225, 1325, 2100, 3000
– Connection rods 3ZB-120
3ZB-180

Rod guide polyamide GF black		
A	for weld stud	
20	M6x16	1001-U47
26	M6x20	

© EMKA Beschlagteile GmbH & Co. KG • 2016 • www.emka.com

Rod guide for round rods 8 mm

PROGRAM 1107 - 3000

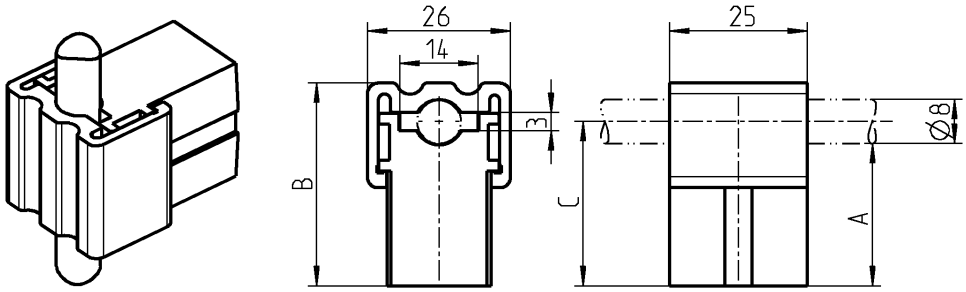

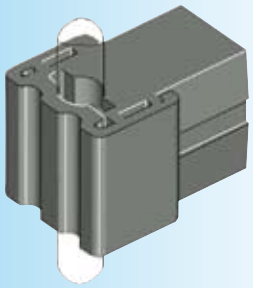

Note:
Rod guide can also be used for horizontal flatrods 3x14

Rod guide polyamide black				
A	B	C	for weld stud	
20	31	24	M6x12-20	1001-U40
26	37	30	M6x12-20	1001-U41

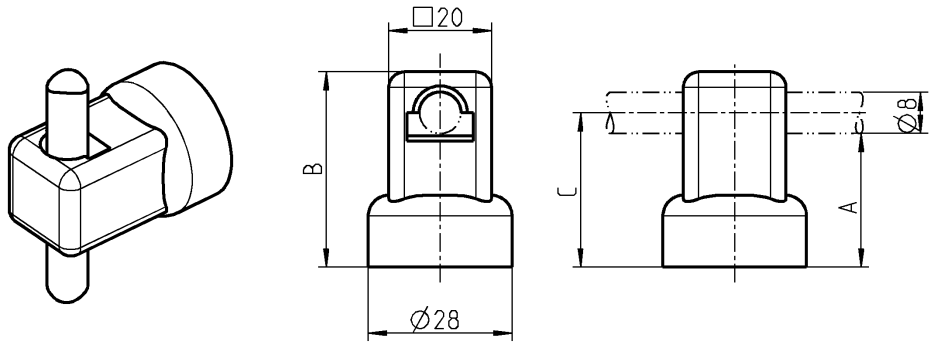

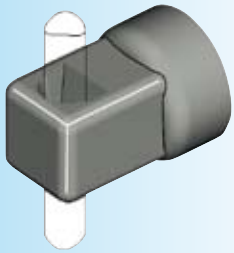

Rod guide polyamide black with flush countersunk cap nut m.s. zinc plated				
A	B	C	for weld stud	
20	32	24	M6x16	1001-U11
26	38	30	M6x20	1001-U12

Further parts see page
Program 1107, 1125, 1150, 1180, 1225, 1325, 2100, 3000
– Connection rods 3ZB-120
3ZB-180

© EMKA Beschlagteile GmbH & Co. KG • 2016 • www.emka.com